mecc alte

Totally Focused. Totally Independent.

Technical Guide

ECO43 4 A

DDS
Dynamic Data Support

The world's largest independent producer of alternators 1 – 5,000kVA

Rev. 3

Standards

Alternators are designed and produced within an ISO 9001 environment. The entire series is manufactured according to, and complies with, the most common specifications such as CEI 2-3, IEC 34-1, EN 60034-1, VDE 0530, BS 4999-5000, NF 51.111, CAN/CSA-C22.2 No14-95-No100-95, NEMA MG 1-2011, ISO 8528-3. Other standards such as UL1446, UL 1004/4 and /B are available on request.

Windings and Performances

All windings are 2/3rds pitch to eliminate triplen harmonics within the voltage waveform and to avoid excessive neutral currents in certain parallel operating conditions. A fully interconnected aluminium or copper damper cage is supplied on the rotor of all models (excluding the ECP3 series).

- 12 wire reconnectable:
  50Hz – 380V to 440V and 220/110V to 240/120V (de-rates may apply at certain voltages)
  60Hz – 380V to 480V and 220/110V to 240/120V (de-rates may apply at certain voltages)

- 6 wire reconnectable:
  50Hz – 380V to 440V and 220V to 240V (de-rates may apply at certain voltages)
  60Hz – 380V to 480V and 220V to 240V (de-rates may apply at certain voltages)

Winding Configurations	Standard		Special (dedicated)			
	12 wire Reconnectable	6 wire Reconnectable	380V and 600V 60Hz	690V 50/60Hz	220-240V 1ph 50Hz	220-240V 1ph 60Hz
ECP3 to ECO38	Std	Option	Option	Option	Option	Option
ECO40 to ECO46	Std	Option	Option	Option	Option (to ECO40)	Option (to ECO40)
Insulation materials	Class H	Class H	Class H	Class H	Class H	Class H
High efficiency	Std	Std	Std	Std	Std	Std
High motor starting	>300%	>300%	>300%	>300%	>300%	>300%
THD (Total Harmonic Distortion)	Typically <3.5% full load L-L	Typically <3.0% full load L-L	Typically <3.5% full load L-L	Typically <3.5% full load L-L	Typically <4.5% full load L-N	Typically <4.5% full load L-N
Interference suppression	VDE 0875 G/N/K, EN61000-6-3, EN61000-6-2, others available on request					

Winding Protection

There are various degrees of protection for the windings following the standard impregnation process, as can be seen here. The TOTAL+ butadienic black flexible coating is recommended for arduous applications.

Winding Protection:	STANDARD	STANDARD+	GREY	GREY+	TOTAL+ (3% de-rate may apply on certain models)
ECP3	Std	Option	Option	Option	Option
ECP28 and ECP32	-	Std	Option	Option	Option
NPE32, ECP34 to ECO46	-	-	Std	Option	Option

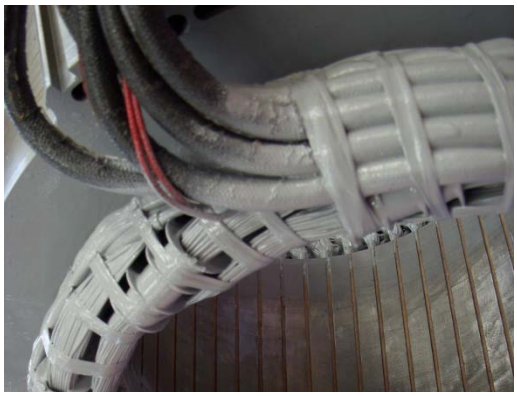

Grey treatment (marinization) on the left, TOTAL+ treatment shown on the right. The EG43 grey varnish, is an high temperature insulating enamel that forms a tough and flexible film, with excellent moisture and chemical protection. It is water and oil proof, and also protects windings from abrasion. It is applied spraying an over coating layer over the impregnated winding, or dipping the stator in a varnish barrel for superior treatments

The TOTAL+ is a protection system that makes Mecc Alte special. It is the ultimate winding treatment that offers truly superior performances when the environment is really harsh, or the application very demanding. It is a rubbery protection treatment, used to replace epoxies and silicones winding encapsulation. The TOTAL+ flexible black compound cures to a tough, resilient, glossy black thick coating that seals the copper against moisture and chemical attacks. Due to its encapsulation capability and flexibility, is also extremely resistant to the particle abrasion as it adsorbs the impacts. Moreover, the high flexibility leads to a long-trouble less life protection, as the compound follows elastically the thermal expansion cycles of the windings from the cold to the hot condition and vice versa without forming any cracks.

Protection for Environment

In addition to protection on the windings themselves, the alternators can have increased ingress protection. Standard levels are IP23 with further upgrades available to include inlet filters, IP43 and IP45: 7% de-rates apply on inlet filters and IP43 protection. 20-30% de-rates apply for IP45 depending on alternator model.

Additional air exit louvres (called IP23+) are optionably retrofittable in the overall ECP32 to ECO 46 range, in order to comply to the most strict marine regulations.

Construction

The robust mechanical structure withstands up to 5G in any direction and 9G vertically and its design permits easy access to the connections and components during routine maintenance check-ups. The mechanical design has used the most advanced FEM techniques. The materials used are: FEP12 steel for the frame, C45 steel for the shaft and cast iron or aluminum pressure die cast for the end-brackets: fans are aluminum die casted either nylon fiber glass loaded, UL compliant materials. Rotors are dynamically balanced according grade 2.5 of ISO 1940-1.

Terminals and Terminal Box

Easy access to regulators is assured through a pull out drawer or a drop down panel to allow safer adjustment. Large terminal boxes allow easy access of power cables, in the ECO43 and ECO46 higher power ranges the terminal allow the convenient choice of power cable or busbar connection with versatility of entry and connection. Current transformers are available as an option on series ECO 40, 43 and 46 with single or dual output.

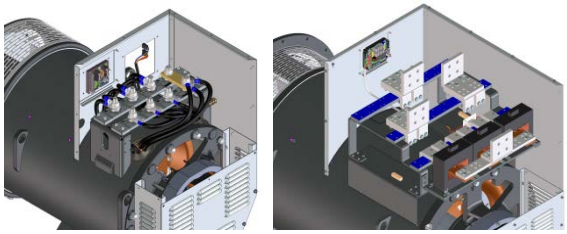

Excitation and Regulation Systems

All ECP/ECO series have MAUX auxiliary winding to power the digital regulator. Both DSR and the DER1 are available to connect to PC through the DxR2 USB interface and DxR TERMINAL software to interrogate/download alarms & settings for analysis or for cloning other regulators. DER2 has got an integrated USB connection and can be connected to the PC without any optional connection boards. More settings such as LAMS, digital RAM based synchronous external control and soft start are obtainable through the DxR connection. Simple analogue potentiometers are available for the more usual adjustments.

Excitation Systems	DSR	DER1	DER2
ECP3 to ECO38	Std	Option	Option
ECO40 to ECO46	-	Std	Option
Parallel Operation	√	√	√
Mains Parallel	√	√	√
3 Phase Sensing (rms)	-	√	√
Accuracy	+/-1%	+/-0.5%	+/-0.5%
Remote Voltage Control	√	√	√
Alarm Log	√	√	√
Analogue and Digital Configurable	√	√	√
LAMS (Load Acceptance V/f)	√	√	√
APO (Active Protection Output)	√	√	√
Soft Start	√	√	√
High dynamic response	-	-	√
USB connection without external boards	-	-	√

For a given motor start duty a smaller machine may be selected – also enhanced by low sub-transient reactance values for non-linear loads. The whole range from 6.5 to 3400kVA is capable of >300% sustained short circuit current for up to 20 seconds.

Optional PMG3

PMG3 can be retro fit or factory fit on ECO 40, 43 and 46 series. This smart MeccAlte design allows an easy fix kit, through a tapered cone coupling and a simple replacement of the rear air louvre. PMG3 is also available on ECO 38, when ordered from the factory.

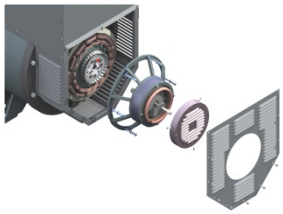

The complete AVR range is fully compatible with both MAUX and PMG3 systems, this minimises spare part management and flexibility of stock as one AVR suits all applications. The PMG3 is delivering the same amount of kVA available with the MAUX.

Accessories

Additional optionals can be fit on our alternator series, such as PTC thermistors or PT100 both on windings and bearings, space heaters, high and low profile of terminal boxes (on most series), air filter clogging sensors, rotating diode bridge failure sensor (RBD), power factor controller for parallel operation (PFR/2), parallel devices (standard from ECO 40), air filters, IP43 and IP45 protections, marine IP23 + protection for SOLAS requirements and many others.

Deration coefficients

	Ambient temperature (Celsius)					
Altitude (meters)	25	40	45	50	55	60
≤ 1000	1.07	1	0.96	0.93	0.91	0.89
> 1000 ≤ 1500	1.01	0.96	0.92	0.89	0.87	0.84
> 1500 ≤ 2000	0.96	0.91	0.87	0.84	0.83	0.79
> 2000 ≤ 3000	0.9	0.85	0.81	0.78	0.76	0.73

Notes on short circuit curves

The indicated coefficients have to be used to correct the three phase short circuit curves values as a function of the rated voltage.

50 Hz		*60 Hz*	
Voltage	*Factor*	*Voltage*	*Factor*
380	0.93X	415	0.85X
400	1X	440	0.90X
415	1.04X	460	0.95X
440	1.10X	480	1X

The indicated coefficient have to be used to correct the three phase short circuit curves values as a function of the type of short circuit voltage.

	3 phase	*2 phase L-L*	*1 phase L-N*
Istantaneous	1X	0.87X	1.30X
Minimum	1X	1.80X	3.20X
Sustained	1X	1.50X	2.50X
Max Duration	20 sec.	10 sec.	4 sec.

All the curves are shown for series or parallel star connection at 400V 50 Hz or 480V 60 Hz. If the unit is reconnected from series to parallel star, the additional coefficient is 2X. From series star to series delta, it is 1.72X. From series star to parallel delta, it is 3.44X.

ECO43 4 A

General characteristics

Pole number	4	Insulation class	H
Phase number	3	Protection class	IP23
Number of wires	12	NDE Bearing type	6322
Execution	Brushless	DE Bearing type	6324
Regulator type	DER-1/A	Maximum Overspeed	2250
Winding pitch	2/3	Altitude	0-1000
Code voltage reference	T0405P3	Balancing	ISO1940-1

Ratings 50Hz

kVA / kW @ Temp. Rise / Ambient °C - 0.8 PF

		STANDBY-163/27				STANDBY-150/40				H-125/40				F-105/40				B-80/40			
Series Star Y		760V	800V	830V	880V	760V	800V	830V	880V	760V	800V	830V	880V	760V	800V	830V	880V	760V	800V	830V	880V
Parallel Star YY		380V	400V	415V	440V	380V	400V	415V	440V	380V	400V	415V	440V	380V	400V	415V	440V	380V	400V	415V	440V
Series Delta Δ		440V	460V	480V	508V	440V	460V	480V	508V	440V	460V	480V	508V	440V	460V	480V	508V	440V	460V	480V	508V
Parallel Delta ΔΔ		220V	230V	240V	254V	220V	230V	240V	254V	220V	230V	240V	254V	220V	230V	240V	254V	220V	230V	240V	254V
ECO43 1S4 A	**kVA**	900	**900**	900	815	840	**840**	840	790	800	**800**	800	750	730	**730**	730	663	640	**640**	640	600
	kW	720	**720**	720	652	672	**672**	672	632	640	**640**	640	600	584	**584**	584	530	512	**512**	512	480
ECO43 2S4 A	**kVA**	1016	**1016**	1016	907	975	**975**	975	870	930	**930**	930	830	850	**850**	850	770	744	**744**	744	664
	kW	813	**813**	813	726	780	**780**	780	696	744	**744**	744	664	680	**680**	680	616	595	**595**	595	531
ECO43 1M4 A	**kVA**	1038	**1120**	1120	1093	992	**1070**	1070	1044	950	**1025**	1025	1000	870	**950**	950	910	760	**820**	820	800
	kW	830	**896**	896	874	794	**856**	856	835	760	**820**	820	800	696	**760**	760	728	608	**656**	656	640
ECO43 2M4 A	**kVA**	1250	**1250**	1140	983	1200	**1200**	1096	940	1150	**1150**	1050	900	1050	**1050**	960	820	920	**920**	840	720
	kW	1000	**1000**	912	786	960	**960**	877	752	920	**920**	840	720	840	**840**	768	656	736	**736**	672	576
ECO43 2L4 A	**kVA**	1420	**1420**	1420	1349	1358	**1358**	1358	1290	1300	**1300**	1300	1235	1200	**1200**	1200	1140	1040	**1040**	1040	988
	kW	1136	**1136**	1136	1079	1086	**1086**	1086	1032	1040	**1040**	1040	988	960	**960**	960	912	832	**832**	832	790
ECO43 VL4 A	**kVA**	1540	**1540**	1440	-	1480	**1480**	1400	-	1400	**1400**	1330	-	1280	**1280**	1210	-	1120	**1120**	1064	-
	kW	1232	**1232**	1152	-	1184	**1184**	1120	-	1120	**1120**	1064	-	1024	**1024**	968	-	896	**896**	851	-

Ratings 60Hz

kVA / kW @ Temp. Rise / Ambient °C - 0.8 PF

		STANDBY-163/27				STANDBY-150/40				H-125/40				F-105/40				B-80/40			
Series Star Y		830V	880V	920V	960V	830V	880V	920V	960V	830V	880V	920V	960V	830V	880V	920V	960V	830V	880V	920V	960V
Parallel Star YY		415V	440V	460V	480V	415V	440V	460V	480V	415V	440V	460V	480V	415V	440V	460V	480V	415V	440V	460V	480V
Series Delta Δ		480V	504V	530V	554V	480V	504V	530V	554V	480V	504V	530V	554V	480V	504V	530V	554V	480V	504V	530V	554V
Parallel Delta ΔΔ		240V	254V	265V	277V	240V	254V	265V	277V	240V	254V	265V	277V	240V	254V	265V	277V	240V	254V	265V	277V
ECO43 1S4 A	**kVA**	962	1050	1050	**1050**	924	1008	1008	**1008**	880	960	960	**960**	800	875	875	**875**	704	768	768	**768**
	kW	770	840	840	**840**	739	806	806	**806**	704	768	768	**768**	640	700	700	**700**	563	614	614	**614**
ECO43 2S4 A	**kVA**	1115	1159	1220	**1220**	1069	1111	1170	**1170**	1020	1060	1116	**1116**	935	969	1020	**1020**	816	850	893	**893**
	kW	892	927	976	**976**	855	889	936	**936**	816	848	893	**893**	748	775	816	**816**	653	680	714	**714**
ECO43 1M4 A	**kVA**	1147	1200	1290	**1365**	1117	1144	1227	**1300**	1050	1100	1180	**1250**	960	1000	1080	**1140**	840	880	944	**1000**
	kW	918	960	1032	**1092**	894	915	982	**1040**	840	880	944	**1000**	768	800	864	**912**	672	704	755	**800**
ECO43 2M4 A	**kVA**	1300	1420	1525	**1525**	1250	1357	1450	**1450**	1200	1300	1400	**1400**	1090	1200	1300	**1300**	960	1040	1120	**1120**
	kW	1040	1136	1220	**1220**	1000	1086	1160	**1160**	960	1040	1120	**1120**	872	960	1040	**1040**	768	832	896	**896**
ECO43 2L4 A	**kVA**	1585	1618	1700	**1700**	1516	1550	1630	**1630**	1451	1482	1560	**1560**	1339	1368	1440	**1440**	1161	1186	1248	**1248**
	kW	1268	1618	1360	**1360**	1213	1240	1304	**1304**	1161	1186	1248	**1248**	1071	1094	1152	**1152**	929	949	998	**998**
ECO43 VL4 A	**kVA**	1736	1824	1824	**1824**	1680	1765	1765	**1765**	1600	1700	1700	**1700**	1450	1540	1540	**1540**	1280	1360	1360	**1360**
	kW	1389	1459	1459	**1459**	1344	1412	1412	**1412**	1280	1360	1360	**1360**	1160	1232	1232	**1232**	1024	1088	1088	**1088**

Reactance & Time constants- Class H / 400V

Unsaturated (ref. EN60034-4)			ECO43 1S4 A	ECO43 2S4 A	ECO43 1M4 A	ECO43 2M4 A	ECO43 2L4 A	ECO43 VL4 A
Xd	Direct-axis synchronous reactance	%	367	431	396,5	377	391	359,3
X'd	Direct-axis transient reactance	%	20	19,1	19,1	21,2	18,5	18,2
X''d	Direct-axis subtransient reactance	%	10,3	8,99	9,68	11	8,7	8,53
Xq	Quadrature-axis synchronous reactance	%	157	177,5	173	160,4	181	120,3
X'q	Quadrature-axis transient reactance	%	157	177,5	173	160,4	181	120,3
X''q	Quadrature-axis subtransient reactance	%	22	22,3	21,3	21,2	19,9	19,1
X_2	Negative-sequence reactance	%	16,2	15,7	15	16	14,2	12
X_0	Zero sequence reactance	%	3,4	4,26	4,02	3,83	4,06	3,74
Saturated								
Xd	Direct-axis synchronous reactance	%	304,6	357,7	329,1	312,9	324,5	298,2
X'd	Direct-axis transient reactance	%	16,6	15,8	15,8	17,6	15,4	15,1
X''d	Direct-axis subtransient reactance	%	8,55	7,46	8,04	9,11	7,22	7,08
Xq	Quadrature-axis synchronous reactance	%	130,3	147,3	143,6	133,1	150,2	99,8
X'q	Quadrature-axis transient reactance	%	130,3	147,3	143,6	133,1	150,2	99,8
X''q	Quadrature-axis subtransient reactance	%	18,3	18,5	17,7	17,6	16,5	15,8
X_2	Negative-sequence reactance	%	13,4	13	12,5	13,3	11,8	9,93
X_0	Zero sequence reactance	%	3,4	4,26	4,02	3,83	4,06	3,74
Kcc	Short circuit ratio		0,5	0,33	0,26	0,35	0,38	0,29
T'd	Transient time constant	sec	0,225	0,234	0,24	0,245	0,271	0,31
T''d	Subtransient time constant	sec	0,018	0,017	0,017	0,018	0,018	0,022
T'do	Open circuit time constant	sec	7,7	8,3	8,2	8,1	8,9	9,5
Ta	Armature time constant	sec	0,02	0,022	0,023	0,024	0,026	0,032

Additional information - Class H / 400V

Io	Excitation current at no load	A	0,9	1,1	0,8	1,5	1,2	0,8
Ic	Excitation current at full load	A	3,5	4,1	3,5	4,3	3,9	3,3
Overload			1 hour in a 6 hours period 110% rated load					
Overload per 20 sec.		%	300					
Heat dissipation		W	32976	35874	38639	41338	43333	44241
Telephone Harmonic Factor - THF		%	<2	<2	<2	<2	<2	<2
Waveform Distors.(THD) full load LL/LN		%	2,8 / 2,6	2 / 2,3	1,9 / 2,2	1,5 / 1,7	1,5 / 1,5	1,7 / 1,6
Waveform Distors.(THD) no load LL/LN		%	3,1 / 3	2,7 / 2,9	2,5 / 2,7	2,1 / 2,1	2,4 / 2,4	2,6 / 2,5

Reactance & Time constants- Class H / 480V

Unsaturated (ref. EN60034-4)			ECO43 1S4 A	ECO43 2S4 A	ECO43 1M4 A	ECO43 2M4 A	ECO43 2L4 A	ECO43 VL4 A
Xd	Direct-axis synchronous reactance	%	367	431	434,8	382,4	391	363,6
X'd	Direct-axis transient reactance	%	20	19,1	20,9	21,5	18,5	18,4
X''d	Direct-axis subtransient reactance	%	10,3	8,99	10,6	11,1	8,7	8,63
Xq	Quadrature-axis synchronous reactance	%	157	177,5	189,7	162,7	181	121,7
X'q	Quadrature-axis transient reactance	%	157	177,5	189,7	162,7	181	121,7
X''q	Quadrature-axis subtransient reactance	%	22	22,3	23,4	21,5	19,9	19,3
X_2	Negative-sequence reactance	%	16,2	15,7	16,5	16,3	14,2	12,1
X_0	Zero sequence reactance	%	3,4	4,26	4,4	3,89	4,06	3,78
Saturated								
Xd	Direct-axis synchronous reactance	%	304,6	357,7	360,9	317,4	324,5	301,8
X'd	Direct-axis transient reactance	%	16,6	15,8	17,3	17,9	15,4	15,3
X''d	Direct-axis subtransient reactance	%	8,55	7,46	8,81	9,24	7,22	7,16
Xq	Quadrature-axis synchronous reactance	%	130,3	147,3	157,5	135,1	150,2	101
X'q	Quadrature-axis transient reactance	%	130,3	147,3	157,5	135,1	150,2	101
X''q	Quadrature-axis subtransient reactance	%	18,3	18,5	19,4	17,9	16,5	16
X_2	Negative-sequence reactance	%	13,4	13	16,7	13,5	11,8	10,1
X_0	Zero sequence reactance	%	3,4	4,26	4,4	3,89	4,06	3,78
Kcc	Short circuit ratio		0,5	0,33	0,25	0,35	0,38	0,29
T'd	Transient time constant	sec	0,225	0,234	0,24	0,245	0,271	0,31
T''d	Subtransient time constant	sec	0,018	0,017	0,017	0,018	0,018	0,022
T'do	Open circuit time constant	sec	7,7	8,3	8,2	8,1	8,9	9,5
Ta	Armature time constant	sec	0,02	0,022	0,023	0,024	0,026	0,032

Additional information - Class H / 480V

Io	Excitation current at no load	A	0,9	1,1	0,8	1,5	1,2	0,8
Ic	Excitation current at full load	A	3,5	4,1	3,5	4,3	3,9	3,3
Overload			1 hour in a 6 hours period 110% rated load					
Overload per 20 sec.		%	300					
Heat dissipation		W	37876	39150	42753	46667	46606	47867
Telephone Interferance Factor - TIF			<40	<40	<40	<40	<40	<40
Waveform Distors.(THD) full load LL/LN		%	2,8 / 2,6	2 / 2,3	1,9 / 2,2	1,5 / 1,7	1,5 / 1,5	1,7 / 1,6
Waveform Distors.(THD) no load LL/LN		%	3,1 / 3	2,7 / 2,9	2,5 / 2,7	2,1 / 2,1	2,4 / 2,4	2,6 / 2,5

Efficiencies @ 50Hz

Models		380V 50Hz					400V 50Hz					415V 50Hz					440V 50Hz				
		0.25	0.5	0.75	1	1.1	0.25	0.5	0.75	1	1.1	0.25	0.5	0.75	1	1.1	0.25	0.5	0.75	1	1.1
ECO43 1S4 A	%	92,0	94,0	95,6	95,2	95,0	92,0	93,9	95,3	95,1	95,0	91,8	93,9	95,4	94,9	94,5	90,9	93,3	95,0	94,5	94,2
ECO43 2S4 A	%	92,0	94,5	95,8	95,5	95,3	92,0	94,4	95,7	95,4	95,2	91,8	94,3	95,5	95,2	95,0	91,3	94,1	95,6	95,0	94,7
ECO43 1M4 A	%	92,2	94,7	95,9	95,6	95,3	92,3	94,6	95,8	95,5	95,3	91,9	94,5	95,6	95,3	95,0	91,4	94,3	95,7	95,1	94,7
ECO43 2M4 A	%	92,0	94,9	96,3	95,8	95,5	92,0	94,8	96,0	95,7	95,5	91,8	94,9	96,1	95,5	95,2	91,3	94,5	95,9	95,3	94,9
ECO43 2L4 A	%	92,0	95,1	96,5	96,1	95,8	92,0	95,0	96,2	96,0	95,8	91,8	94,9	96,2	95,8	95,5	91,3	94,6	96,1	95,6	95,3
ECO43 VL4 A	%	92,1	95,4	96,7	96,3	96,0	92,1	95,3	96,4	96,2	96,0	91,9	95,2	96,4	96,0	95,7	-	-	-	-	-

ECO43 1S4 A
400/230 50Hz

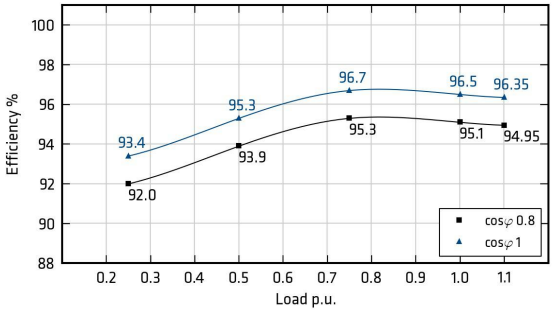

ECO43 2S4 A
400/230 50Hz

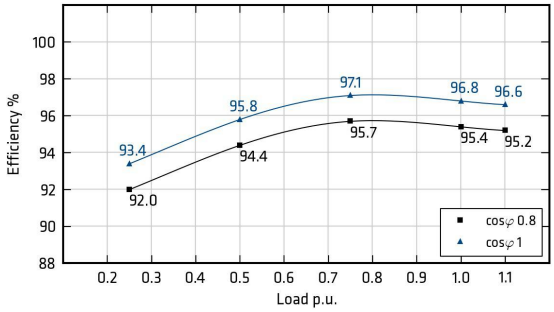

ECO43 1M4 A
400/230 50Hz

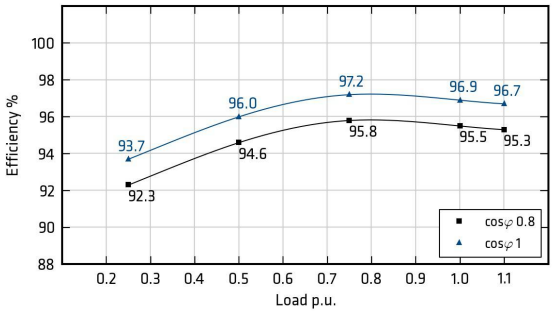

ECO43 2M4 A
400/230 50Hz

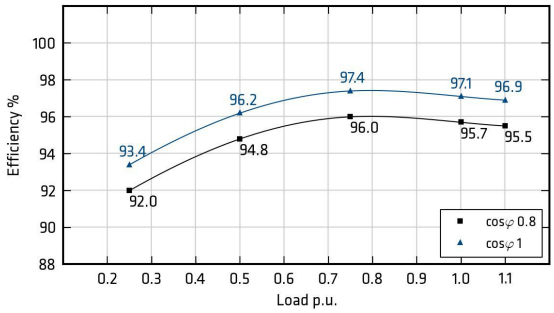

ECO43 2L4 A
400/230 50Hz

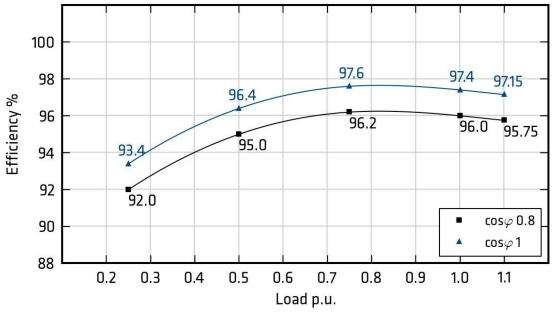

ECO43 VL4 A
400/230 50Hz

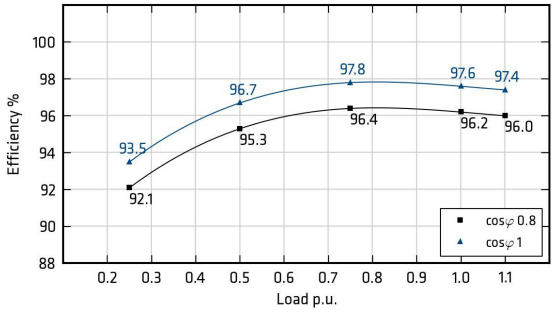

Efficiencies @ 60Hz

Models		415V 60Hz					440V 60Hz					460V 60Hz					480V 60Hz				
		0.25	0.5	0.75	1	1.1	0.25	0.5	0.75	1	1.1	0.25	0.5	0.75	1	1.1	0.25	0.5	0.75	1	1.1
ECO43 1S4 A	%	92,9	94,2	95,3	94,7	94,5	93,0	94,3	95,5	95,2	94,6	93,0	94,5	95,9	95,4	95,1	93,0	94,4	95,6	95,3	95,0
ECO43 2S4 A	%	93,0	94,5	95,4	95,2	95,0	93,0	94,6	95,6	95,7	95,6	93,0	94,8	96,0	95,9	95,8	93,0	94,7	95,8	95,8	95,6
ECO43 1M4 A	%	93,1	94,6	95,5	95,4	95,1	93,2	94,7	95,8	95,9	95,7	93,5	94,9	96,2	96,1	95,9	93,4	94,8	96,0	95,9	95,7
ECO43 2M4 A	%	93,0	94,9	95,8	95,5	95,3	93,0	95,0	96,1	96,0	95,8	93,0	95,2	96,3	96,2	96,0	93,0	95,1	96,1	96,0	95,8
ECO43 2L4 A	%	92,5	95,0	96,1	95,8	95,5	92,5	95,1	96,3	96,3	96,1	92,5	95,3	96,7	96,5	96,2	92,5	95,2	96,5	96,4	96,2
ECO43 VL4 A	%	92,4	95,2	96,3	96,0	95,7	92,4	95,3	96,5	96,5	96,3	92,4	95,5	96,9	96,7	96,4	92,4	95,4	96,7	96,6	96,4

ECO43 1S4 A
480/277 60Hz

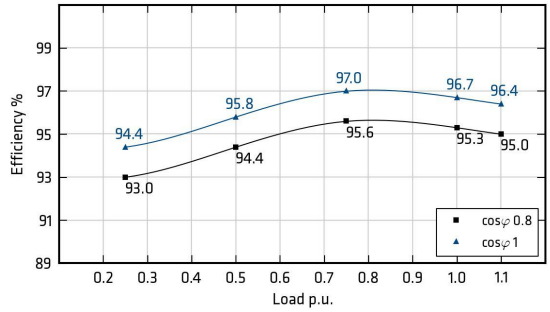

ECO43 2S4 A
480/277 60Hz

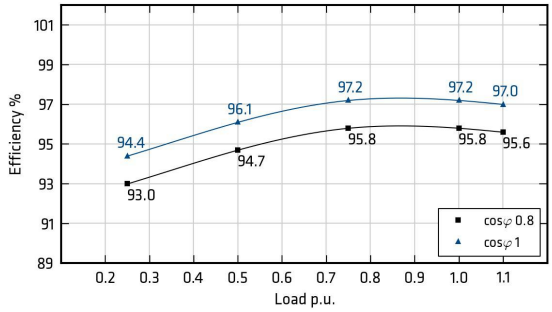

ECO43 1M4 A
480/277 60Hz

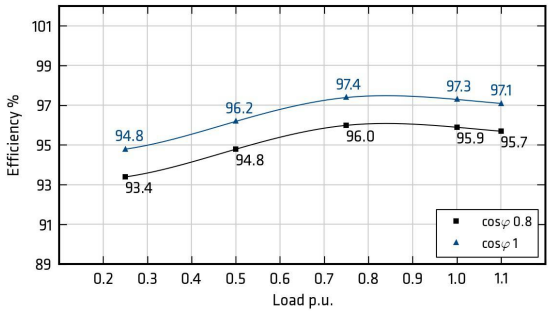

ECO43 2M4 A
480/277 60Hz

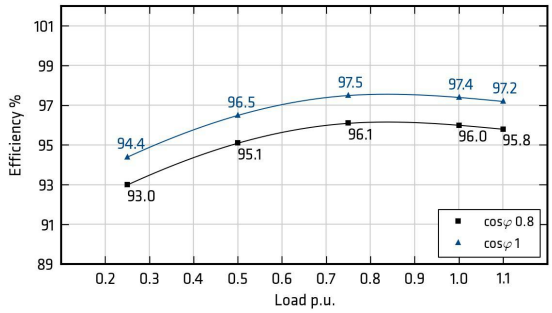

ECO43 2L4 A
480/277 60Hz

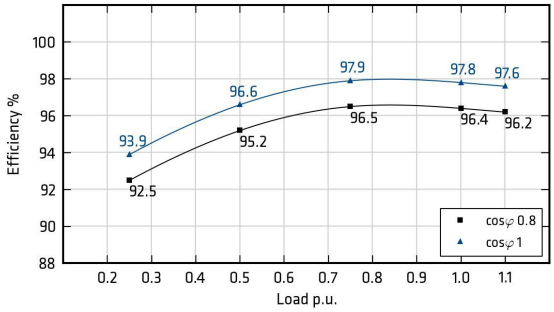

ECO43 VL4 A
480/277 60Hz

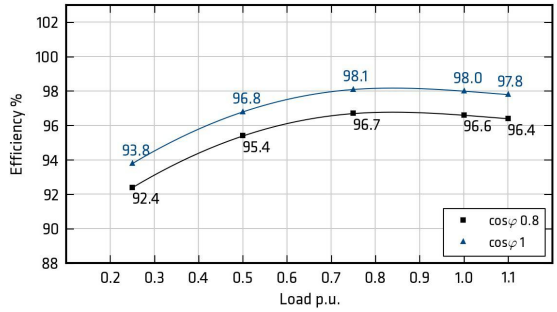

Transients voltage

400V - 50Hz

Motor Starting @ P.F. 0,6

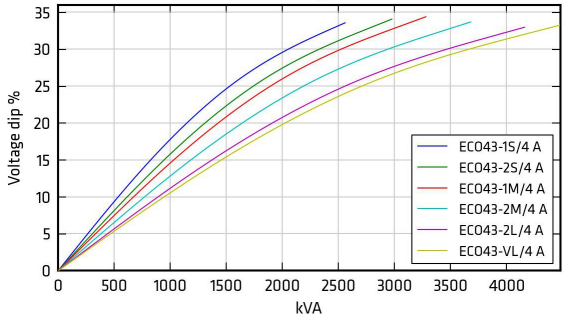

480V - 60Hz

Motor Starting @ P.F. 0,6

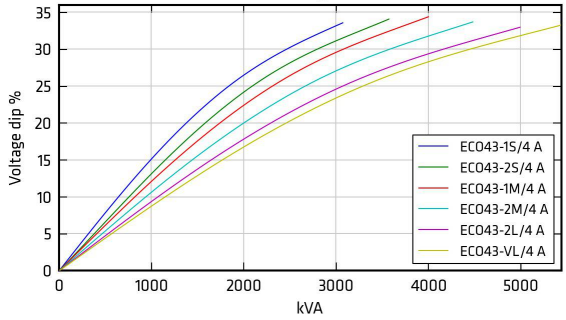

Phase Loading @ P.F. 0,8

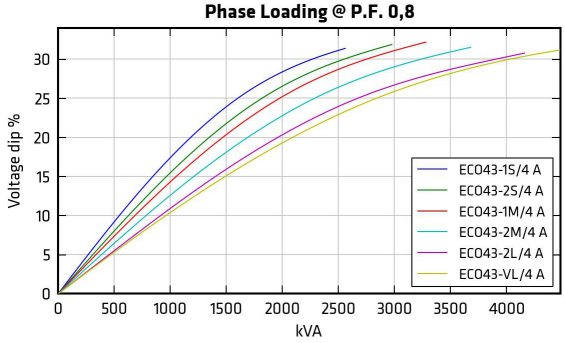

Phase Loading @ P.F. 0,8

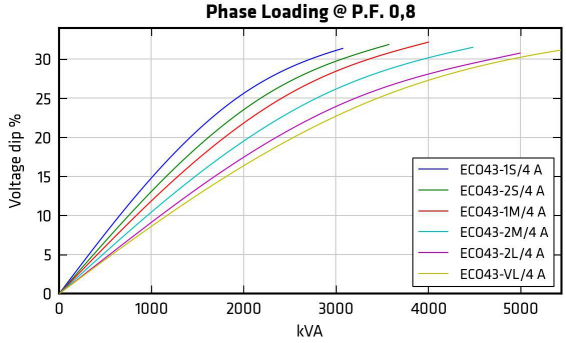

Load Shedding @ P.F. 0,8

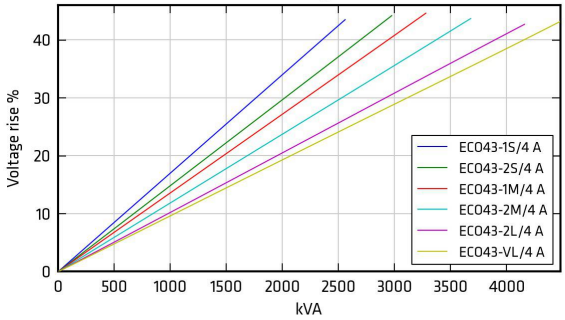

Load Shedding @ P.F. 0,8

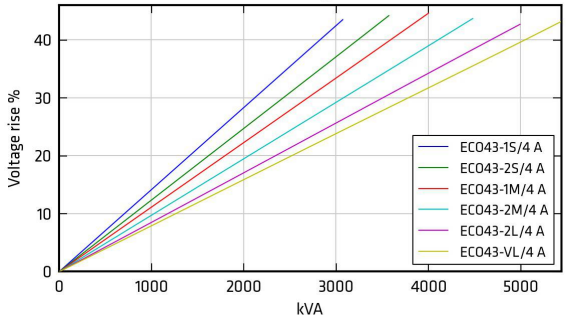

In order to scale transient curves as a function of a power factor or voltage if not indicated, please proceed as follows:

Power Factor coefficient corrector (PFCC), to be used on power factor 0.6 curves:
PFCC=sin(ARCcos (PFnew))/0.8
Example. The PFCC at power factor 0.3 is 1.192 [PFCC= sin(ARCcos (0.3))/0.8]. This means that the voltage fall at a given power at pf 0.3 is equivalent to the one that can be read on the pf 0.6 curve if the load is considered 1.192 times bigger (19% higher value.).
In this example, a 100 kVA load insertion at pf 0.3 is equivalent in voltage fall to a 119kVA load insertion at pf 0.6.

Voltage coefficient corrector (VCC):
VCC=(400/Vnew)2 if 50 Hz; VCC=(480/Vnew)2 if 60 Hz
Example. VCC at 415V 60 Hz is 1.338 [VCC=(480/415)^2]. This means that the voltage fall at a given power at 415V is equivalent to the one that can be read on the power factor 0.6 curve if the load is considered 1.338 times bigger (33% higher value.).
In this example, a 100 kVA load insertion at 415V is equivalent in voltage fall to a 133kVA load insertion at 480V.

50Hz Short circuit decrement curves - No load excitation at rated speed

ECO43 1S4 A

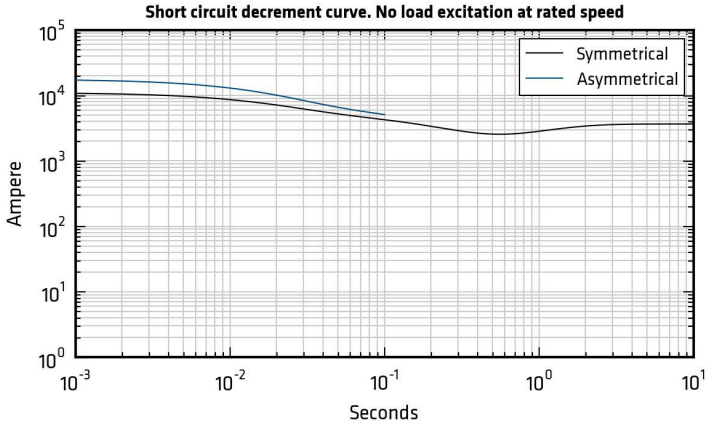

ECO43 2S4 A

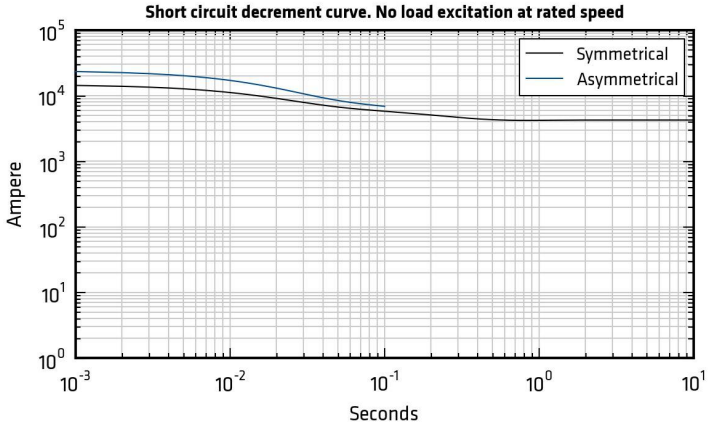

ECO43 1M4 A

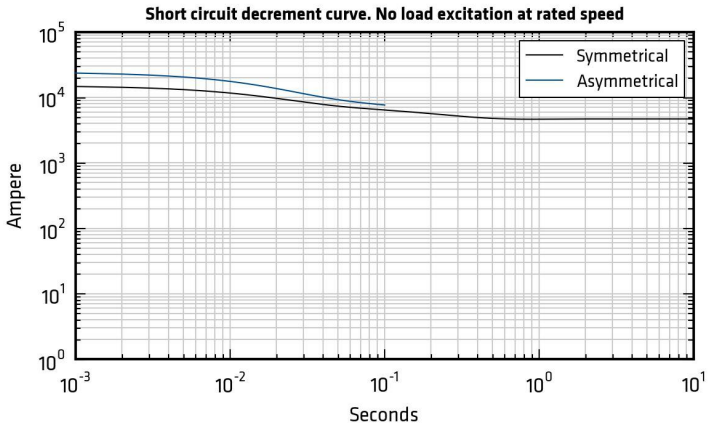

ECO43 2M4 A

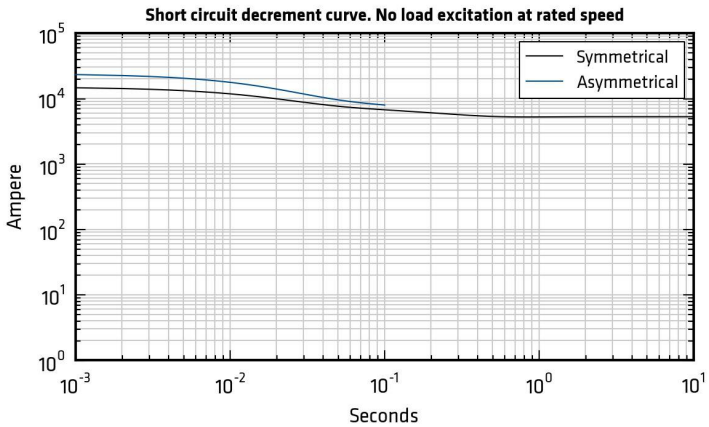

*Please refer to tables at page 6

50Hz Short circuit decrement curves - No load excitation at rated speed

ECO43 2L4 A

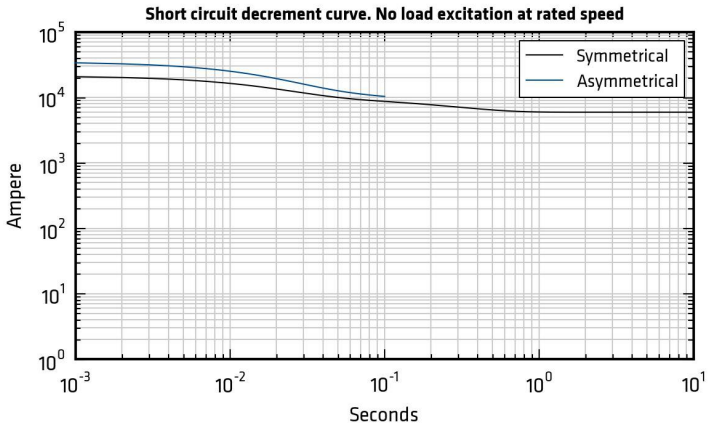

ECO43 VL4 A

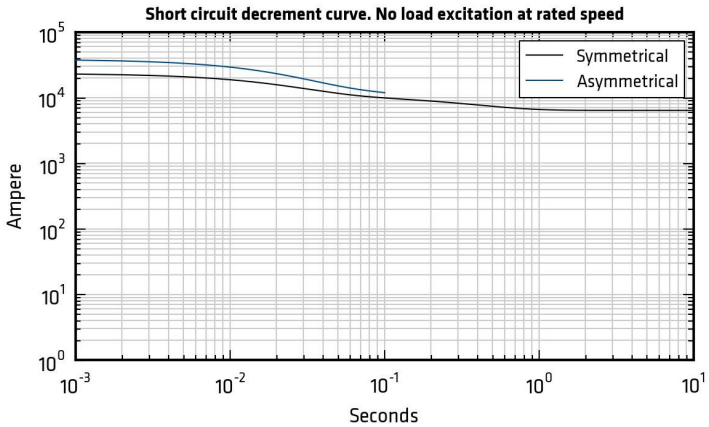

*Please refer to tables at page 6

60Hz Short circuit decrement curves - No load excitation at rated speed

ECO43 1S4 A

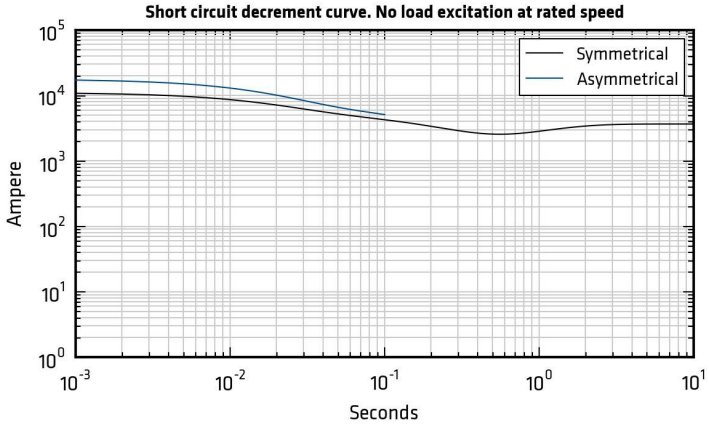

ECO43 2S4 A

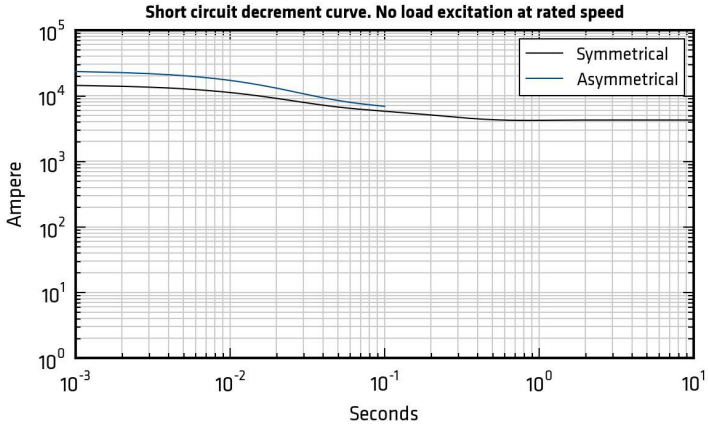

ECO43 1M4 A

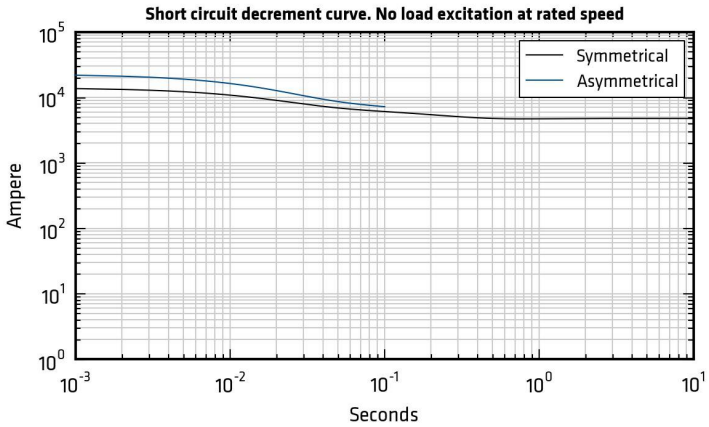

ECO43 2M4 A

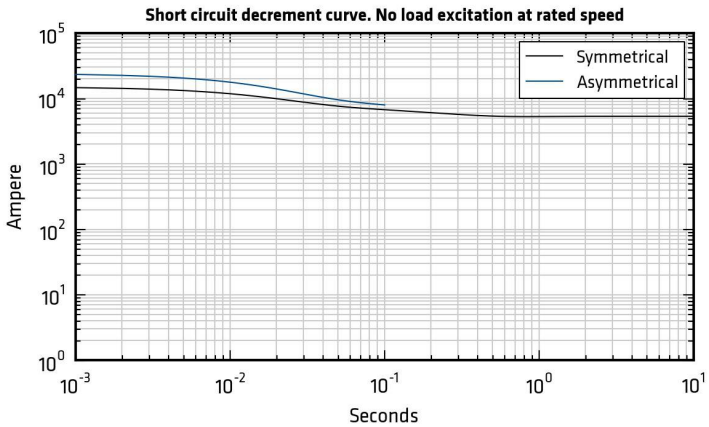

*Please refer to tables at page 6

60Hz Short circuit decrement curves - No load excitation at rated speed

ECO43 2L4 A

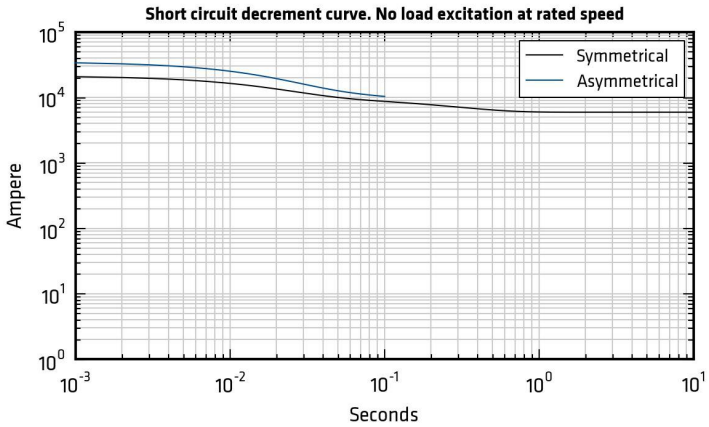

ECO43 VL4 A

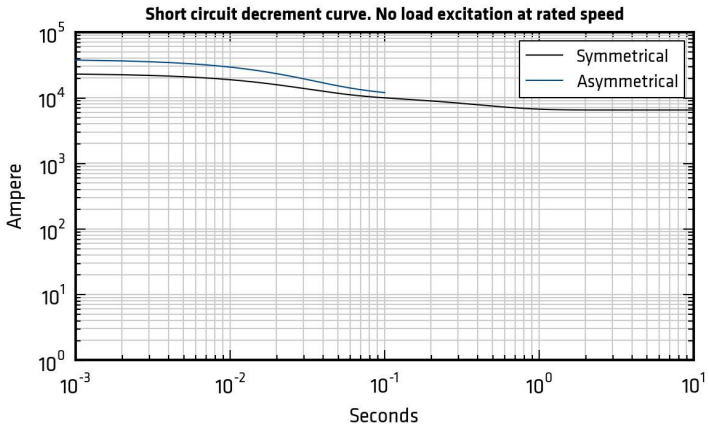

*Please refer to tables at page 6

Additional Characteristics

Data		ECO43 1S4 A		ECO43 2S4 A		ECO43 1M4 A		ECO43 2M4 A		ECO43 2L4 A		ECO43 VL4 A	
		50Hz	60Hz	50Hz	60Hz	50Hz	60Hz	50Hz	60Hz	50Hz	60Hz	50Hz	60Hz
Damper cage		Copper											
Stator Winding Resistance (20°C)	Ω	0,011		0,009		0,01		0,008		0,006		0,005	
Rotor Winding Resistance (20°C)	Ω	2,1		2,3		2,325		2,5		2,8		2,886	
Stator Exciter Resistance (20°C)	Ω	10,63		10,63		10,63		10,63		10,63		10,63	
Rotor Exciter Resistance (20°C)	Ω	0,13		0,13		0,13		0,13		0,13		0,13	
Weight of complete generator	kg	1920,0		2140,0		2275,0		2370,0		2700,0		2980,0	
Unbalanced magnetic pull	kN/mm	5,0		5,7		5,4		5,0		5,9		6,1	
Air flow	m^3/min	90,0	108,0	90,0	108,0	90,0	108,0	90,0	108,0	90,0	108,0	90,0	108,0
Noise level at 1m/7m	dB(A)	95/84	99/89	95/84	99/89	95/84	99/89	95/84	99/89	95/84	99/89	95/84	99/89

PQ Diagram

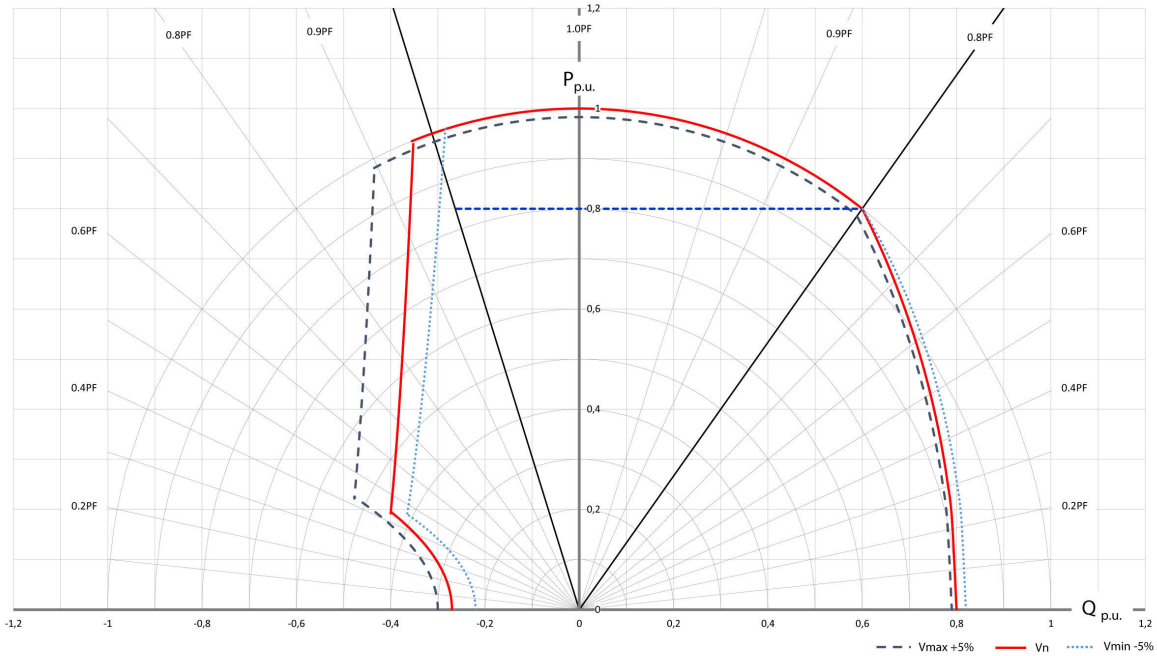

ECO43 1S4 A

TWO BEARING MOMENTS OF INERTIA

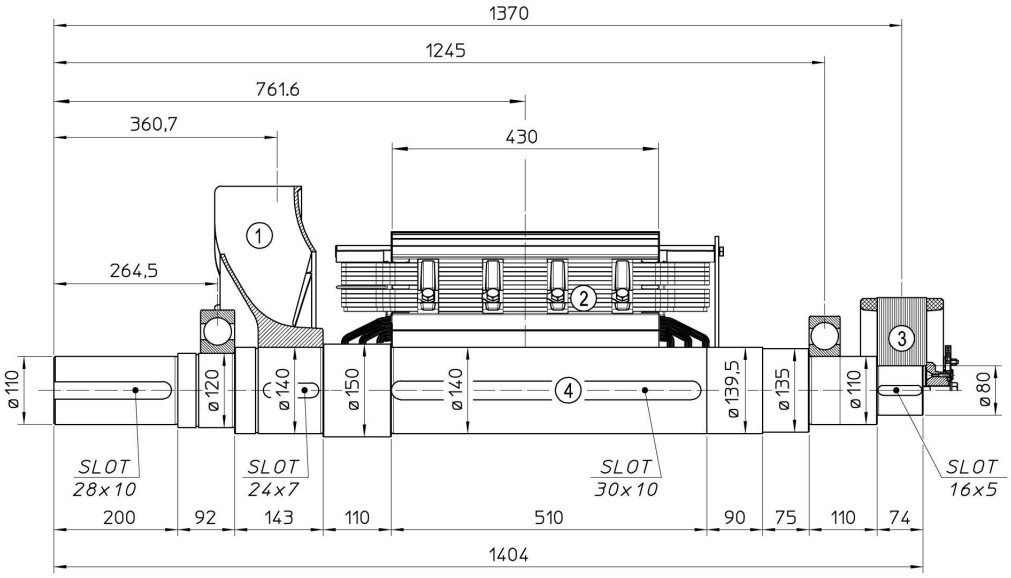

POS.	COMPONENT	WEIGHT (kg)	J (kgm^2)
1	FAN	26.2	1.0289
2	MAIN ROTOR	476.5	13.7333
3	EX. ROTOR	40.1	0.4889
4	SHAFT	144.3	0.3242
TOTAL		687.1	15.5753

TWO BEARING DIMENSIONS

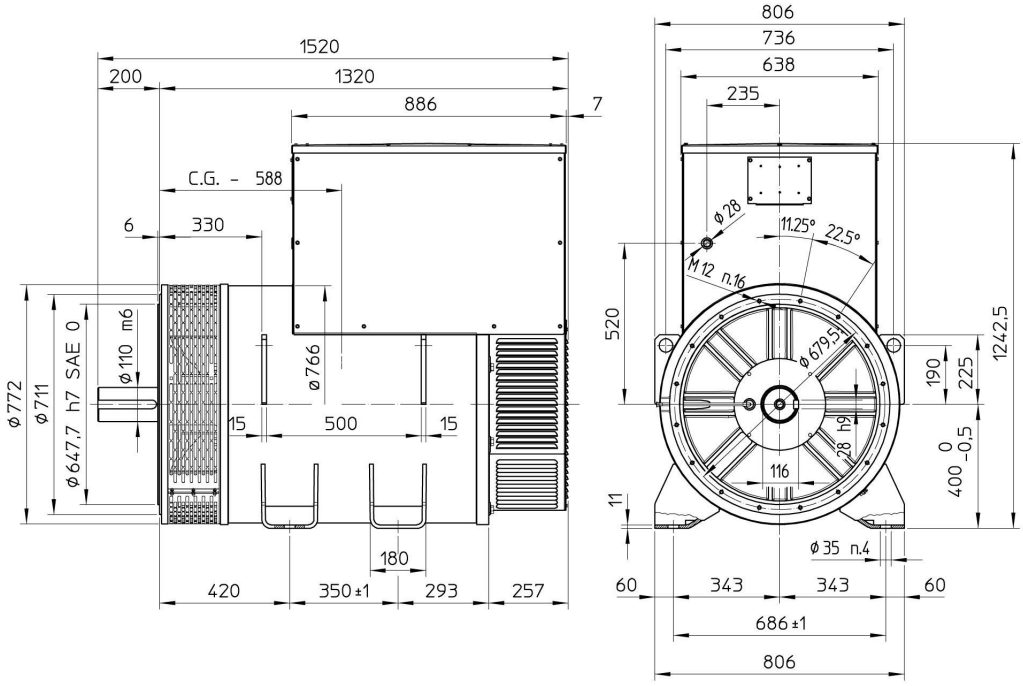

C.G.= GRAVITY CENTER

ECO43 1S4 A

SINGLE BEARING MOMENTS OF INERTIA

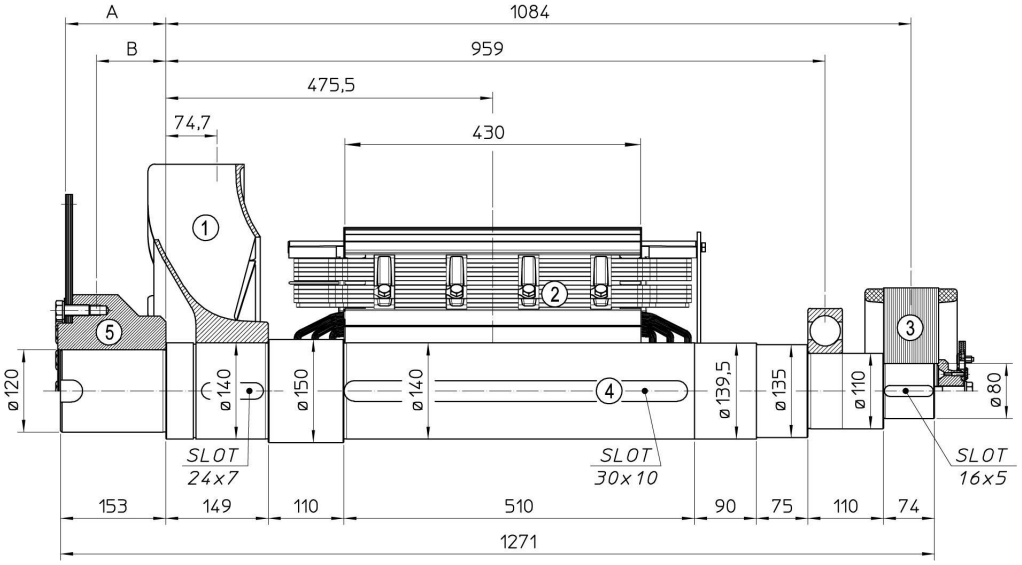

POS.	COMPONENT	WEIGHT (kg)	J (kgm^2)
1	FAN	26.2	1.0289
2	MAIN ROTOR	476.5	13.7333
3	EX. ROTOR	40.1	0.4889
4	SHAFT	135.9	0.3141
TOTAL		678.7	15.5652

POS.	COMPONENT	SAE N°	A	B	WEIGHT (kg)	J (kgm^2)
5	SHAFTS COUPLING FLEX PLATE	14	155.7	99.5	56.5	0.8261
		18	145.7	100.7	60.9	1.2458
		21	130.0	98.5	69.0	2.2332

SINGLE BEARING DIMENSIONS

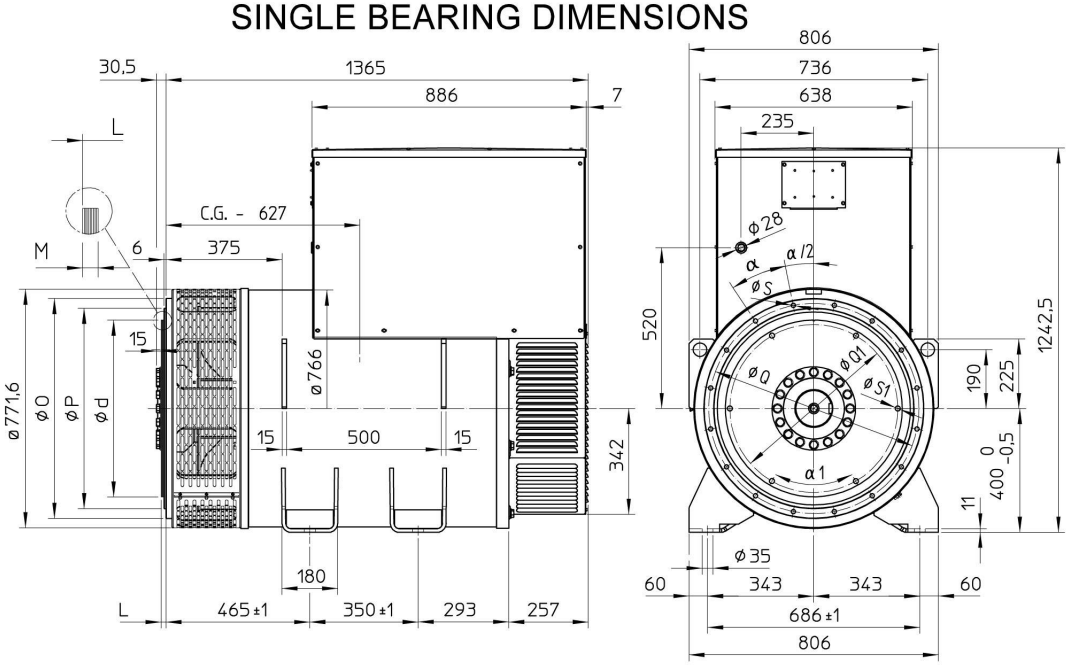

SAE N.	FLANGIA/FLANGE BRIDE/FLANSCH				
	O	P	Q	S	α
1	711	511.2	530.2	12	30°
0	711	647.7	679.5	14	22.5°
00	883	787.4	850.9	14	22.5°

SAE N.	GIUNTI A DISCHI / DISC COUPLING DISCQUE DE MONOPALIER / SCHEIBENKUPPLUNG					
	d	L	M	Q1	S1	α1
14	466.72	25.4	10	438.15	13.5	45°
18	571.5	15.7	10	542.92	16.5	60°
21	673.1	0	12	641.35	16.5	30°

C.G.= GRAVITY CENTER

ECO43 2S4 A

TWO BEARING MOMENTS OF INERTIA

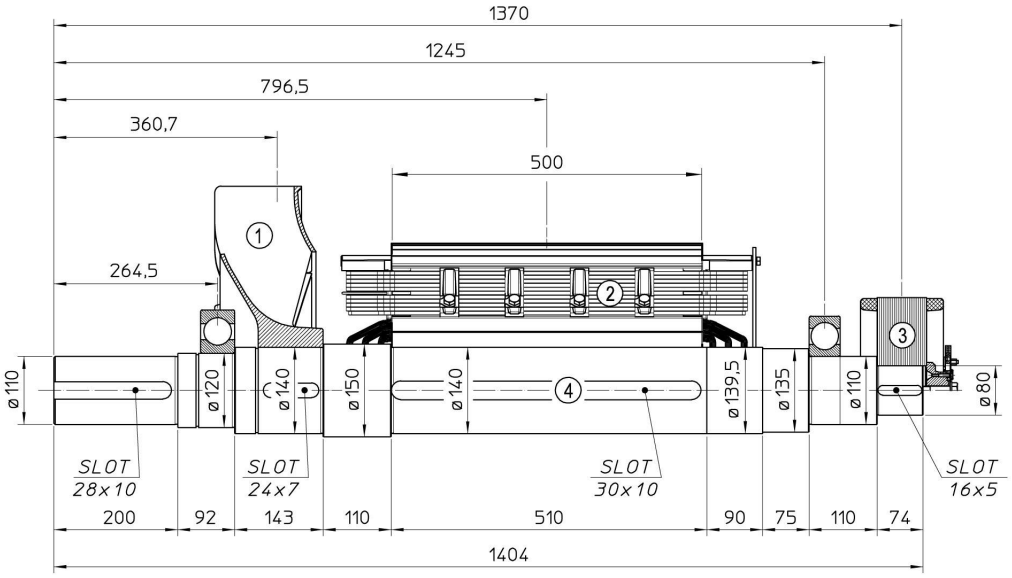

POS.	COMPONENT	WEIGHT (kg)	J (kgm^2)
1	FAN	26.2	1.0289
2	MAIN ROTOR	545.5	15.6937
3	EX. ROTOR	40.1	0.4889
4	SHAFT	144.3	0.3242
TOTAL		756.1	17.5357

TWO BEARING DIMENSIONS

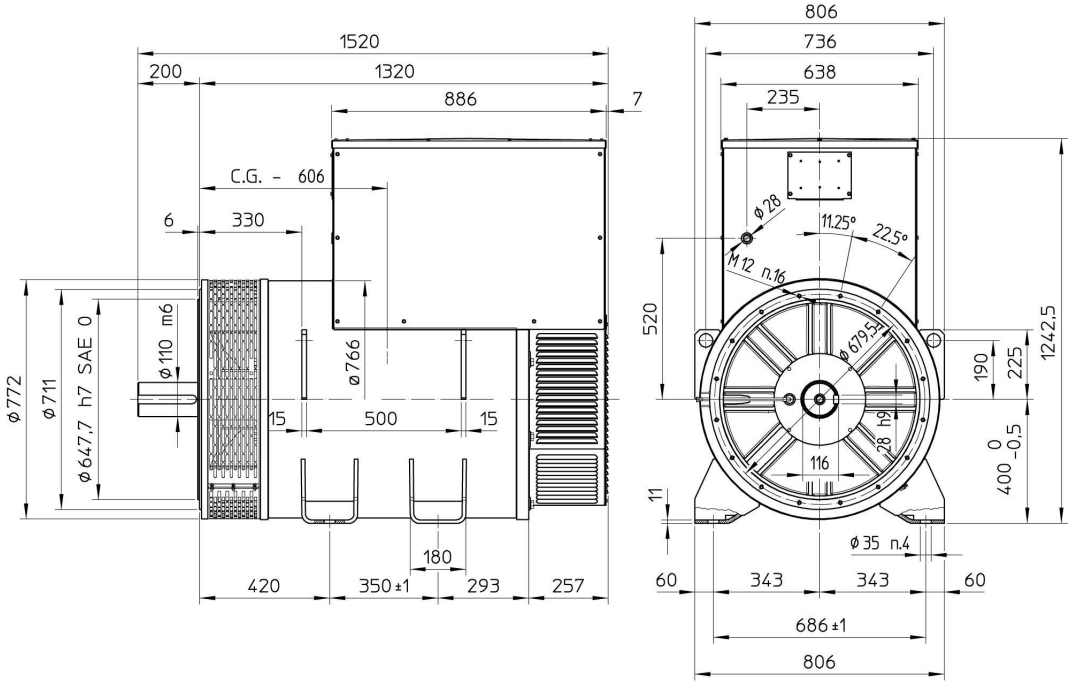

C.G.= GRAVITY CENTER

ECO43 2S4 A

SINGLE BEARING MOMENTS OF INERTIA

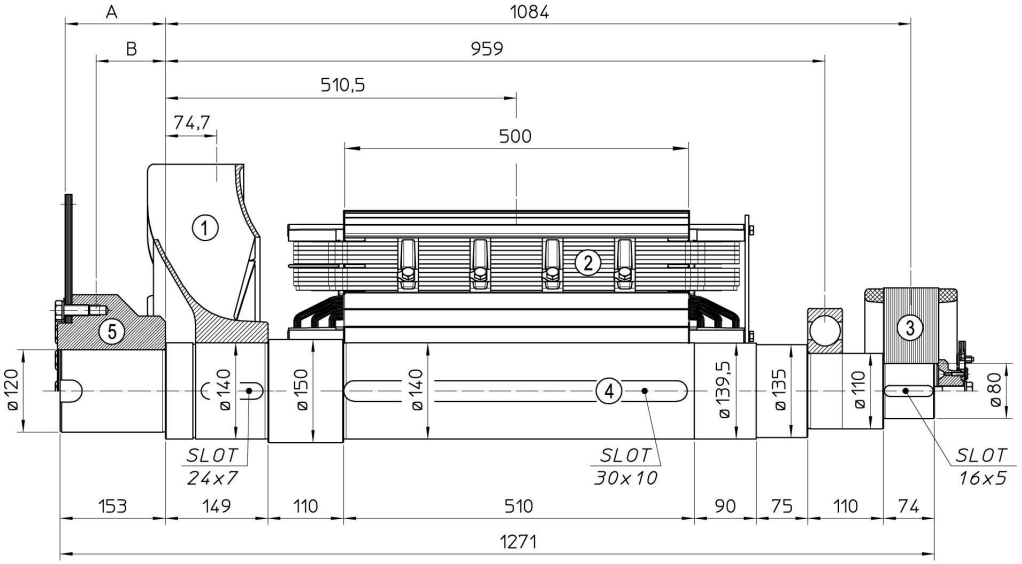

POS.	COMPONENT	WEIGHT (kg)	J (kgm^2)
1	FAN	26.2	1.0289
2	MAIN ROTOR	545.5	15.6937
3	EX. ROTOR	40.1	0.4889
4	SHAFT	135.9	0.3141
TOTAL		747.7	17.5256

POS.	COMPONENT	SAE N°	A	B	WEIGHT (kg)	J (kgm^2)
5	SHAFTS COUPLING FLEX PLATE	14	155.7	99.5	56.5	0.8261
		18	145.7	100.7	60.9	1.2458
		21	130.0	98.5	69.0	2.2332

SINGLE BEARING DIMENSIONS

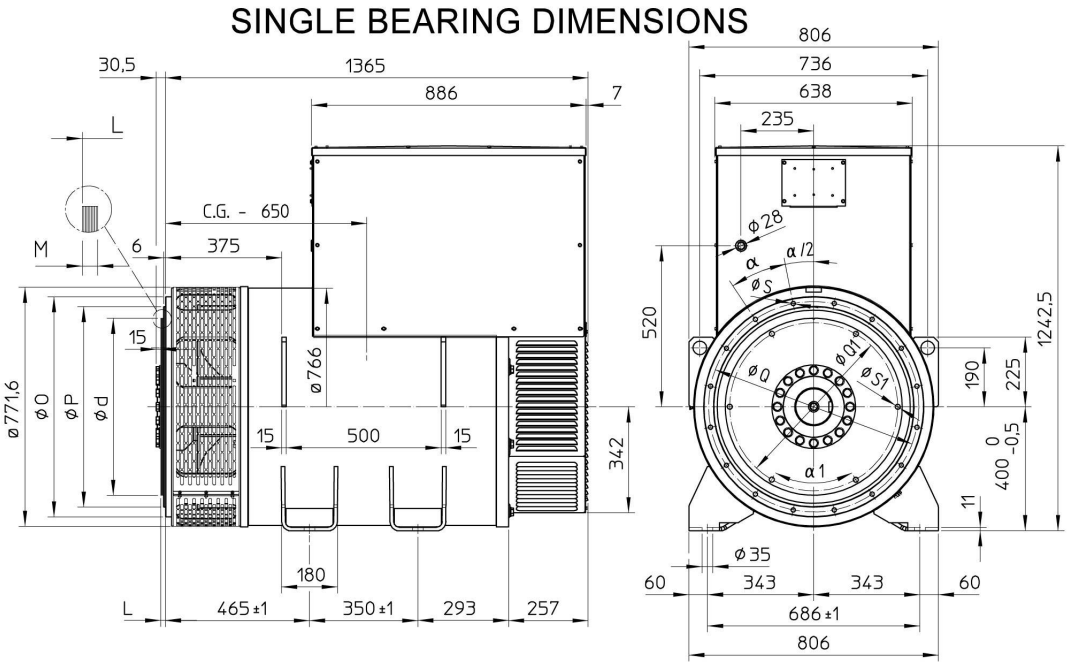

SAE N.	FLANGIA/FLANGE BRIDE/FLANSCH				
	O	P	Q	S	α
1	711	511.2	530.2	12	30°
0	711	647.7	679.5	14	22.5°
00	883	787.4	850.9	14	22.5°

SAE N.	GIUNTI A DISCHI / DISC COUPLING DISCQUE DE MONOPALIER / SCHEIBENKUPPLUNG					
	d	L	M	Q1	S1	α1
14	466.72	25.4	10	438.15	13.5	45°
18	571.5	15.7	10	542.92	16.5	60°
21	673.1	0	12	641.35	16.5	30°

C.G.= GRAVITY CENTER

ECO43 1M4 A

TWO BEARING MOMENTS OF INERTIA

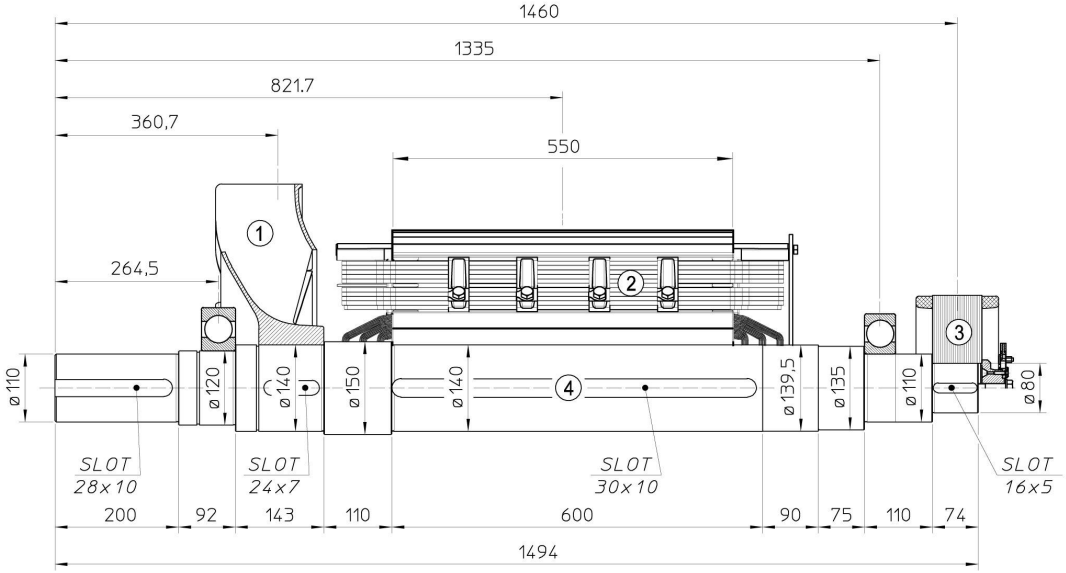

POS.	COMPONENT	WEIGHT (kg)	J (kgm^2)
1	FAN	26.2	1.0289
2	MAIN ROTOR	593.3	17.0460
3	EX. ROTOR	40.1	0.4889
4	SHAFT	154.9	0.3498
TOTAL		814.5	18.9136

TWO BEARING DIMENSIONS

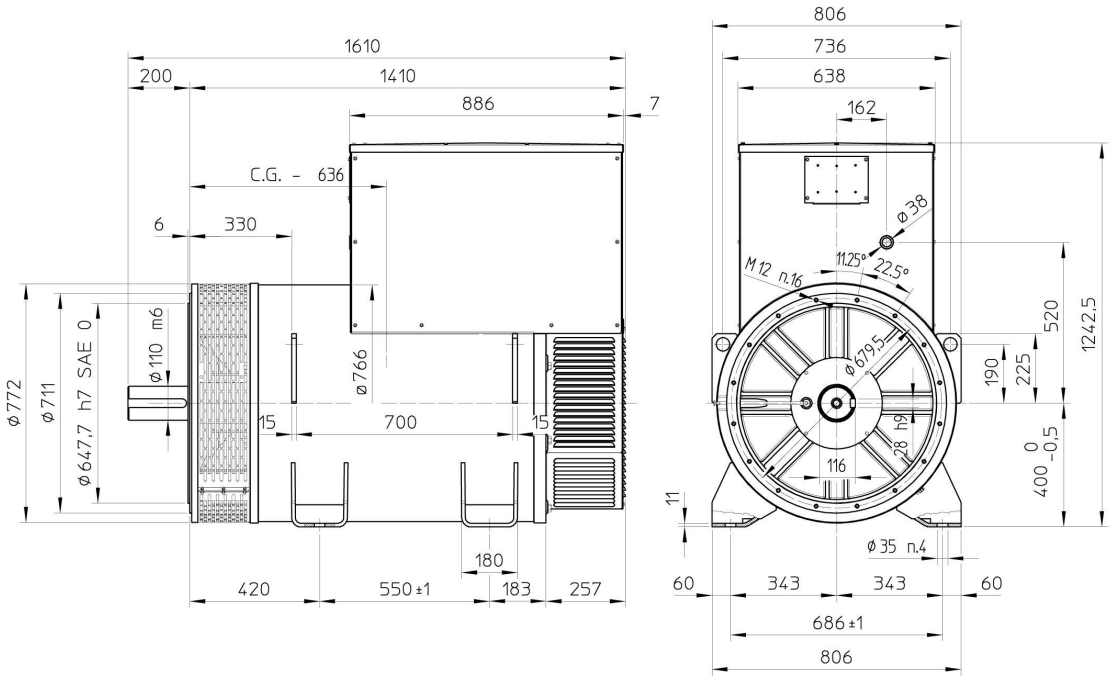

C.G.= GRAVITY CENTER

ECO43 1M4 A

SINGLE BEARING MOMENTS OF INERTIA

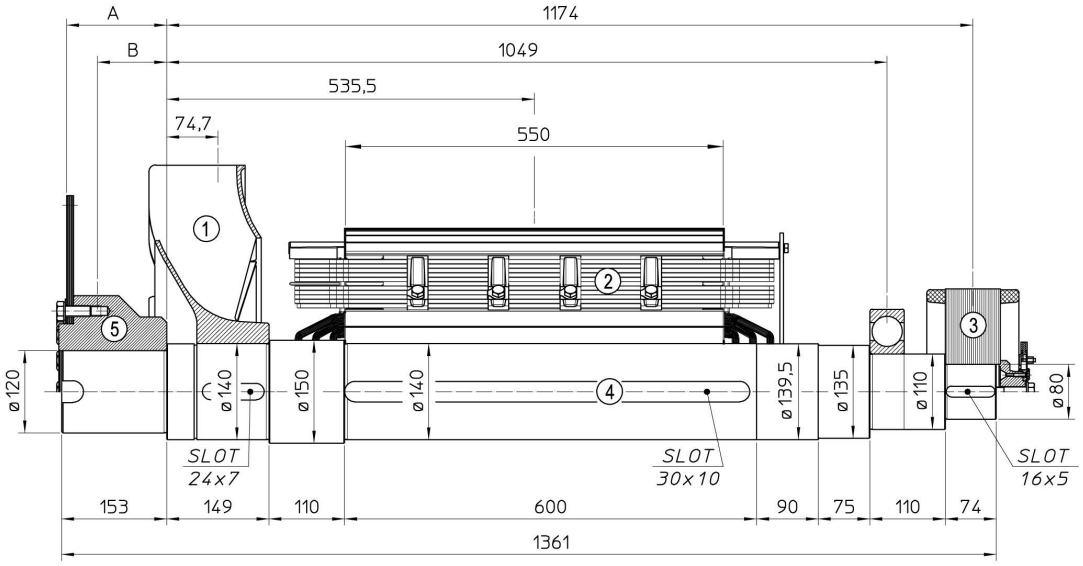

POS.	COMPONENT	WEIGHT (kg)	J (kgm^2)
1	FAN	26.2	1.0289
2	MAIN ROTOR	593.3	17.0460
3	EX. ROTOR	40.1	0.4889
4	SHAFT	146.5	0.3397
TOTAL		806.1	18.9035

POS.	COMPONENT	SAE N°	A	B	WEIGHT (kg)	J (kgm^2)
5	SHAFTS COUPLING FLEX PLATE	14	155.7	99.5	56.5	0.8261
		18	145.7	100.7	60.9	1.2458
		21	130.0	98.5	69.0	2.2332

SINGLE BEARING DIMENSIONS

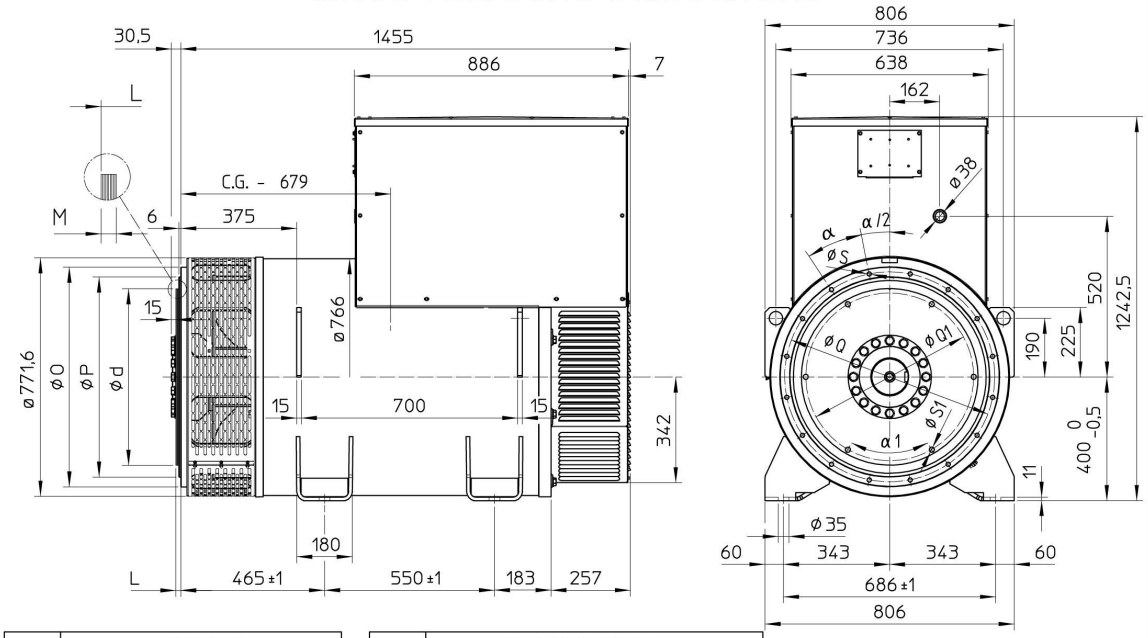

SAE N.	FLANGIA/FLANGE BRIDE/FLANSCH				
	O	P	Q	S	α
1	711	511.2	530.2	12	30°
0	711	647.7	679.5	14	22.5°
00	883	787.4	850.9	14	22.5°

SAE N.	GIUNTI A DISCHI / DISC COUPLING DISCQUE DE MONOPALIER / SCHEIBENKUPPLUNG					
	d	L	M	Q1	S1	α1
14	466.72	25.4	10	438.15	13.5	45°
18	571.5	15.7	10	542.92	16.5	60°
21	673.1	0	12	641.35	16.5	30°

C.G.= GRAVITY CENTER

ECO43 2M4 A

TWO BEARING MOMENTS OF INERTIA

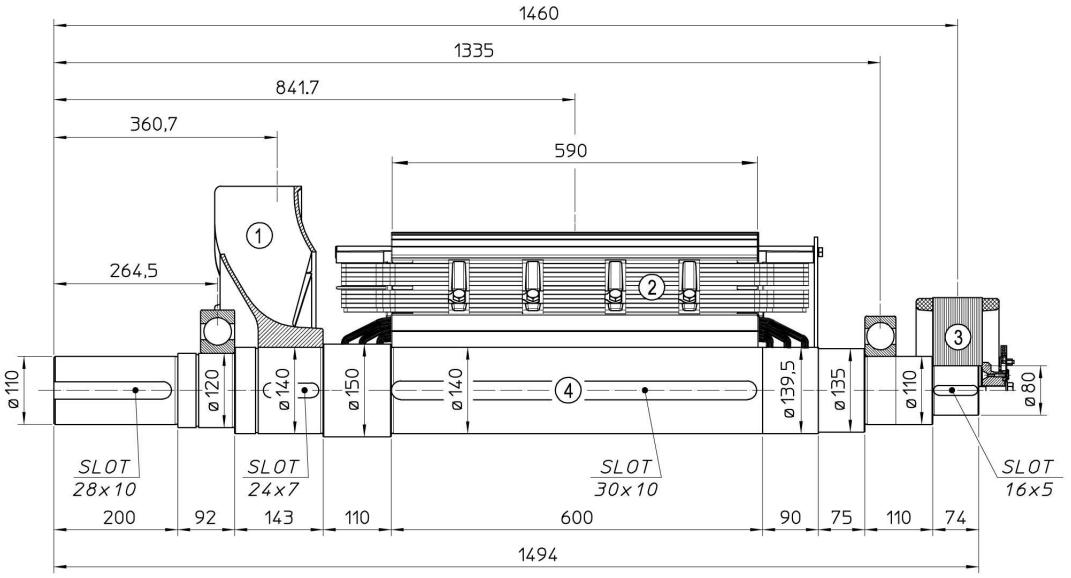

POS.	COMPONENT	WEIGHT (kg)	J (kgm^2)
1	FAN	26.2	1.0289
2	MAIN ROTOR	631.1	18.1107
3	EX. ROTOR	40.1	0.4889
4	SHAFT	154.9	0.3498
TOTAL		852.3	19.9783

TWO BEARING DIMENSIONS

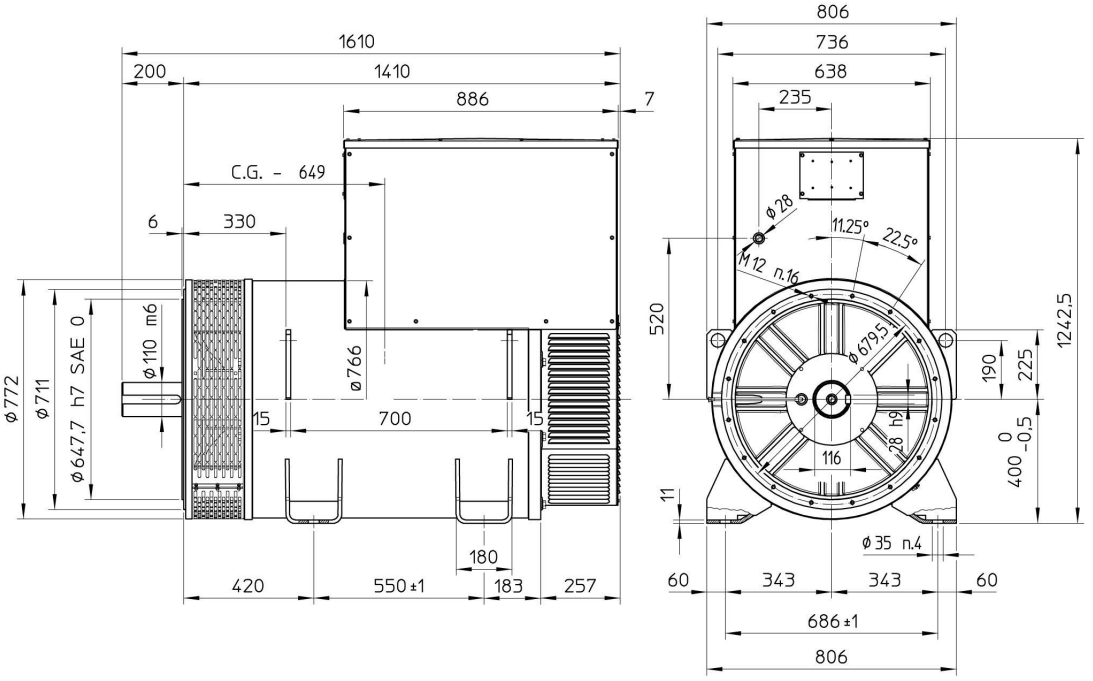

C.G.= GRAVITY CENTER

ECO43 2M4 A

SINGLE BEARING MOMENTS OF INERTIA

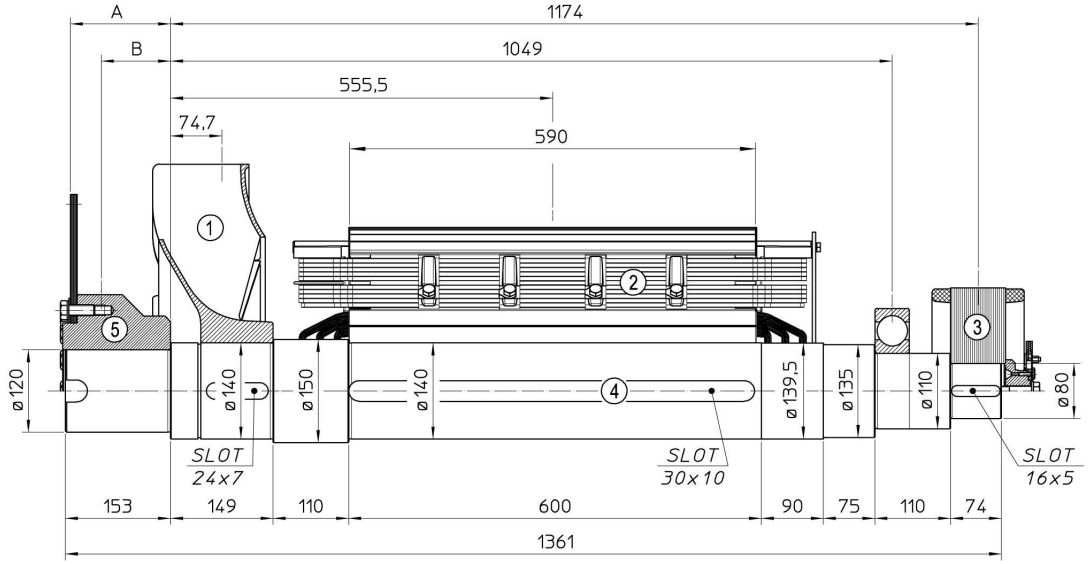

POS.	COMPONENT	WEIGHT (kg)	J (kgm^2)
1	FAN	26.2	1.0289
2	MAIN ROTOR	631.1	18.1107
3	EX. ROTOR	40.1	0.4889
4	SHAFT	146.5	0.3397
TOTAL		843.9	19.9682

POS.	COMPONENT	SAE N°	A	B	WEIGHT (kg)	J (kgm^2)
5	SHAFTS COUPLING FLEX PLATE	14	155.7	99.5	56.5	0.8261
		18	145.7	100.7	60.9	1.2458
		21	130.0	98.5	69.0	2.2332

SINGLE BEARING DIMENSIONS

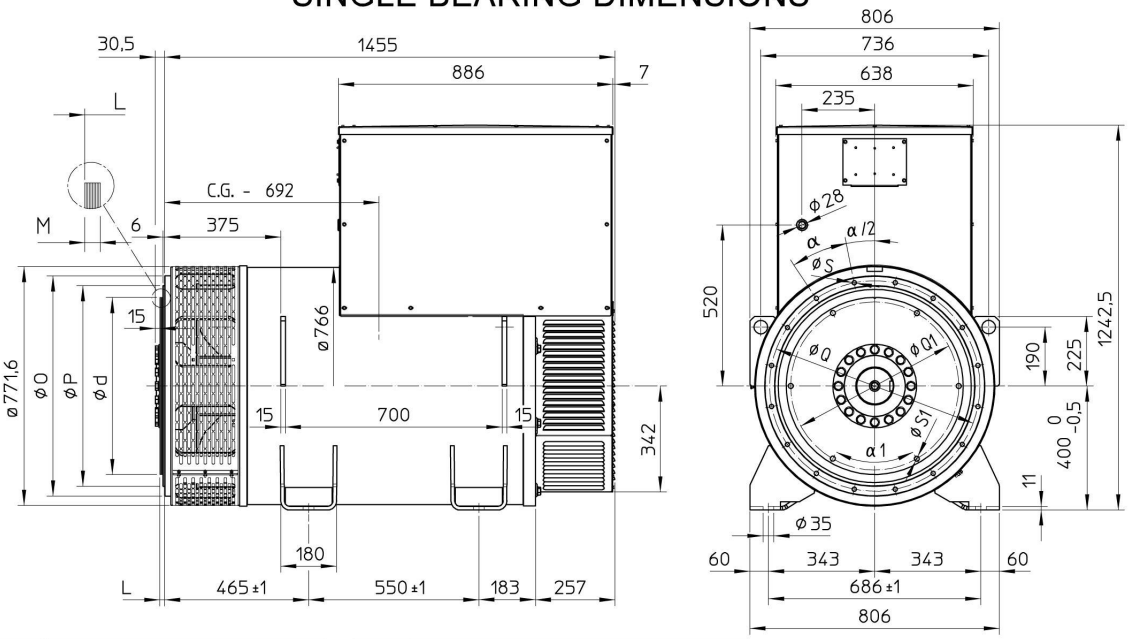

SAE N.	FLANGIA/FLANGE BRIDE/FLANSCH				
	O	P	Q	S	α
1	711	511.2	530.2	12	30°
0	711	647.7	679.5	14	22.5°
00	883	787.4	850.9	14	22.5°

SAE N.	GIUNTI A DISCHI / DISC COUPLING DISCQUE DE MONOPALIER / SCHEIBENKUPPLUNG					
	d	L	M	Q1	S1	α1
14	466.72	25.4	10	438.15	13.5	45°
18	571.5	15.7	10	542.92	16.5	60°
21	673.1	0	12	641.35	16.5	30°

C.G.= GRAVITY CENTER

ECO43 2L4 A

TWO BEARING MOMENTS OF INERTIA

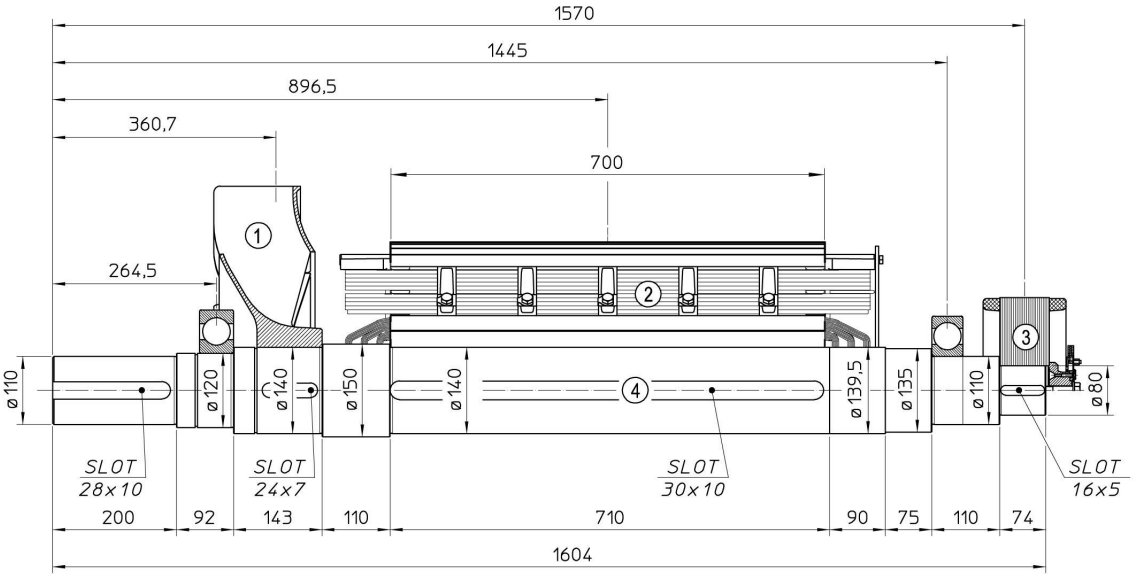

POS.	COMPONENT	WEIGHT (kg)	J (kgm^2)
1	FAN	26.2	1.0289
2	MAIN ROTOR	739.2	21.1818
3	EX. ROTOR	40.1	0.4889
4	SHAFT	167.8	0.3811
TOTAL		973.3	23.0807

TWO BEARING DIMENSIONS

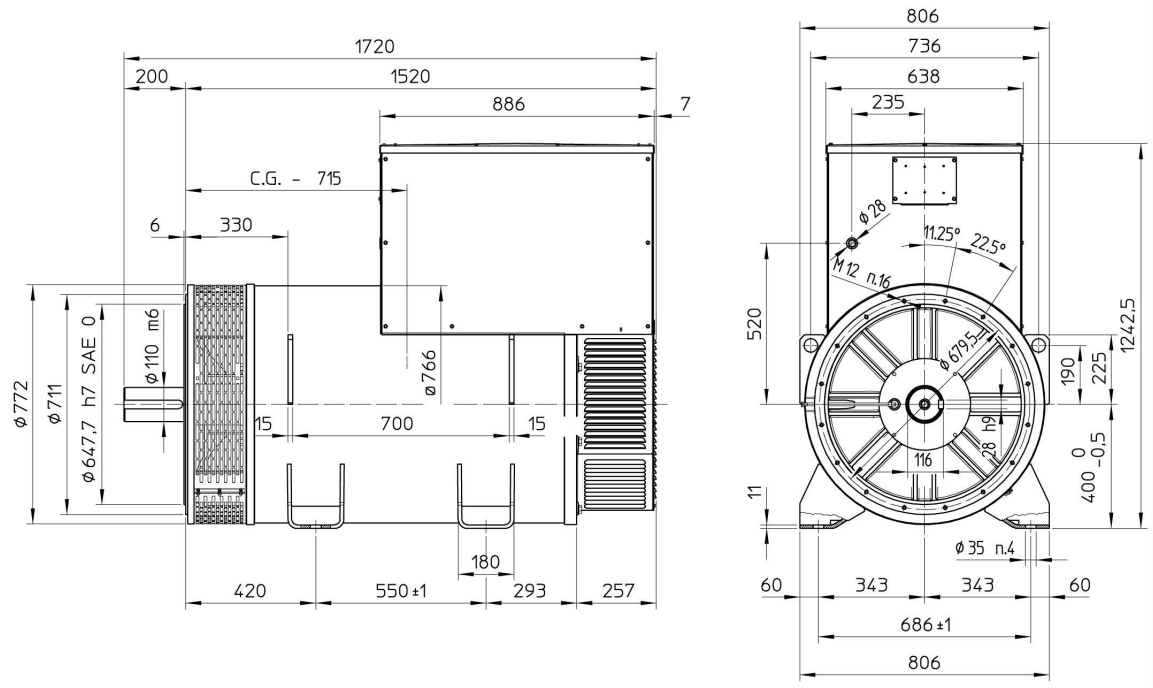

C.G.= GRAVITY CENTER

ECO43 2L4 A

SINGLE BEARING MOMENTS OF INERTIA

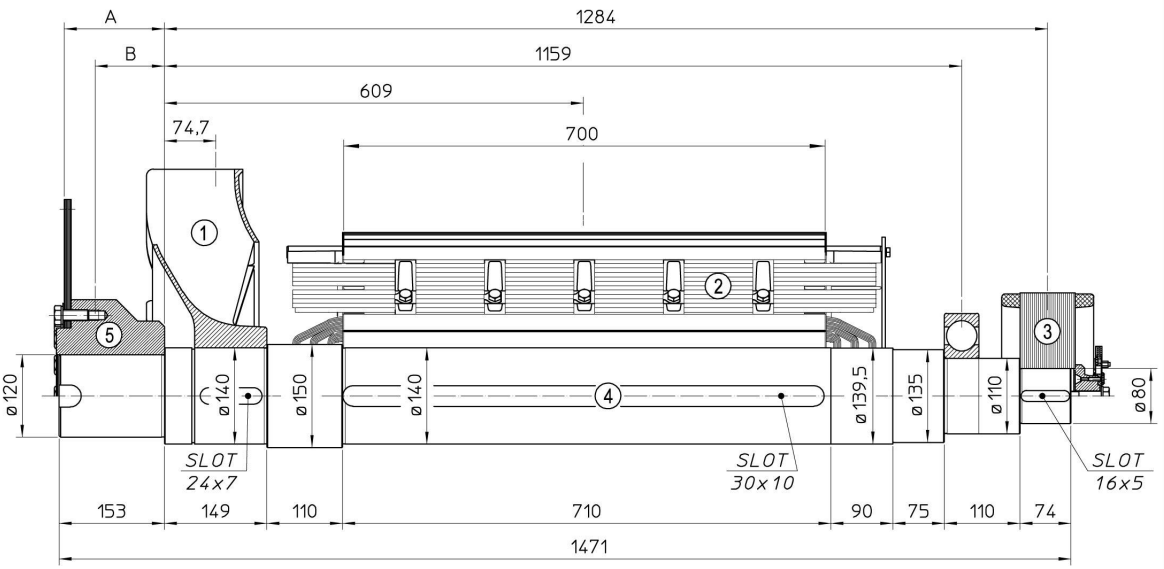

POS.	COMPONENT	WEIGHT (kg)	J (kgm^2)
1	FAN	26.2	1.0289
2	MAIN ROTOR	739.2	21.1818
3	EX. ROTOR	40.1	0.4889
4	SHAFT	159.5	0.3710
TOTAL		965.0	23.0706

POS.	COMPONENT	SAE N°	A	B	WEIGHT (kg)	J (kgm^2)
5	SHAFTS COUPLING FLEX PLATE	14	155.7	99.5	56.5	0.8261
		18	145.7	100.7	60.9	1.2458
		21	130.0	98.5	69.0	2.2332

SINGLE BEARING DIMENSIONS

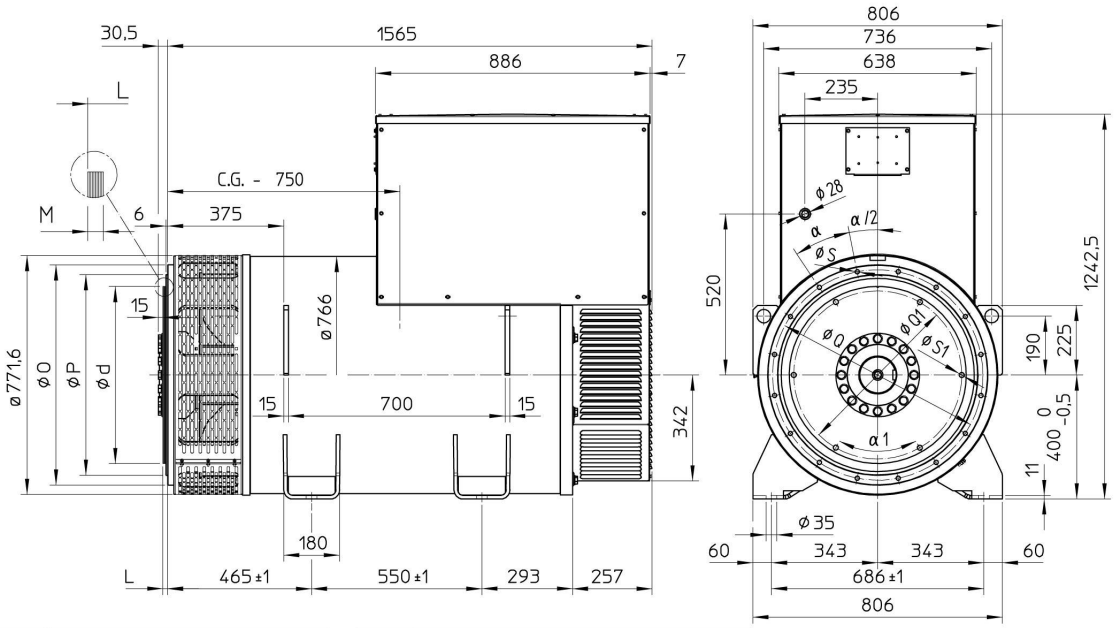

SAE N.	FLANGIA/FLANGE BRIDE/FLANSCH				
	O	P	Q	S	α
1	711	511.2	530.2	12	30°
0	711	647.7	679.5	14	22.5°
00	883	787.4	850.9	14	22.5°

SAE N.	GIUNTI A DISCHI / DISC COUPLING DISCQUE DE MONOPALIER / SCHEIBENKUPPLUNG					
	d	L	M	Q1	S1	α1
14	466.72	25.4	10	438.15	13.5	45°
18	571.5	15.7	10	542.92	16.5	60°
21	673.1	0	12	641.35	16.5	30°

C.G.= GRAVITY CENTER

ECO43 VL4 A

TWO BEARING MOMENTS OF INERTIA

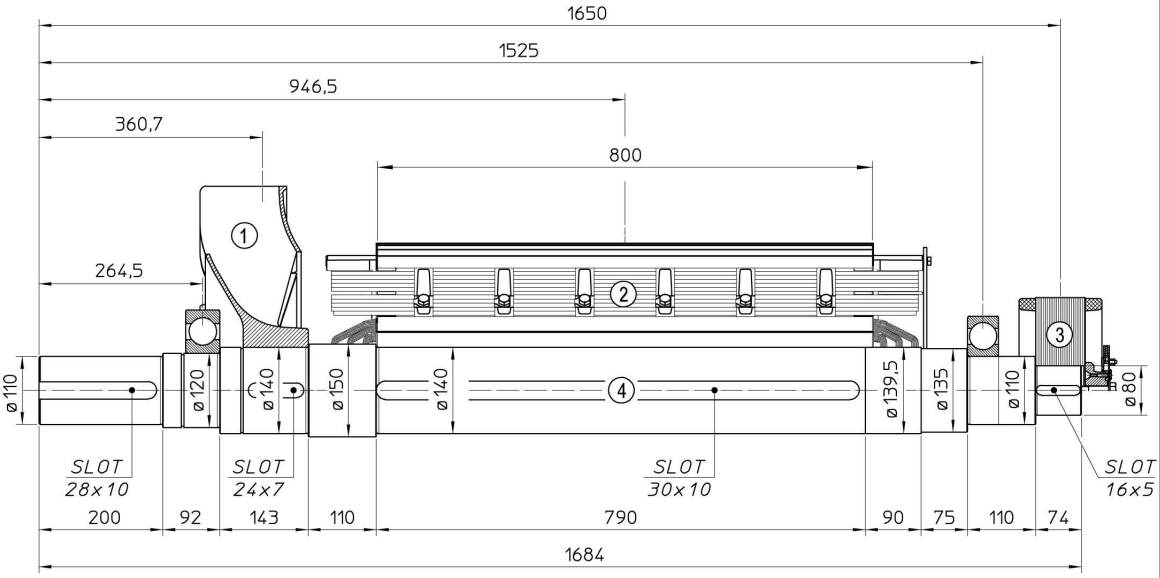

POS.	COMPONENT	WEIGHT (kg)	J (kgm^2)
1	FAN	26.2	1.0289
2	MAIN ROTOR	841.2	24.0977
3	EX. ROTOR	40.1	0.4889
4	SHAFT	177.3	0.4039
TOTAL		1084.8	26.0194

TWO BEARING DIMENSIONS

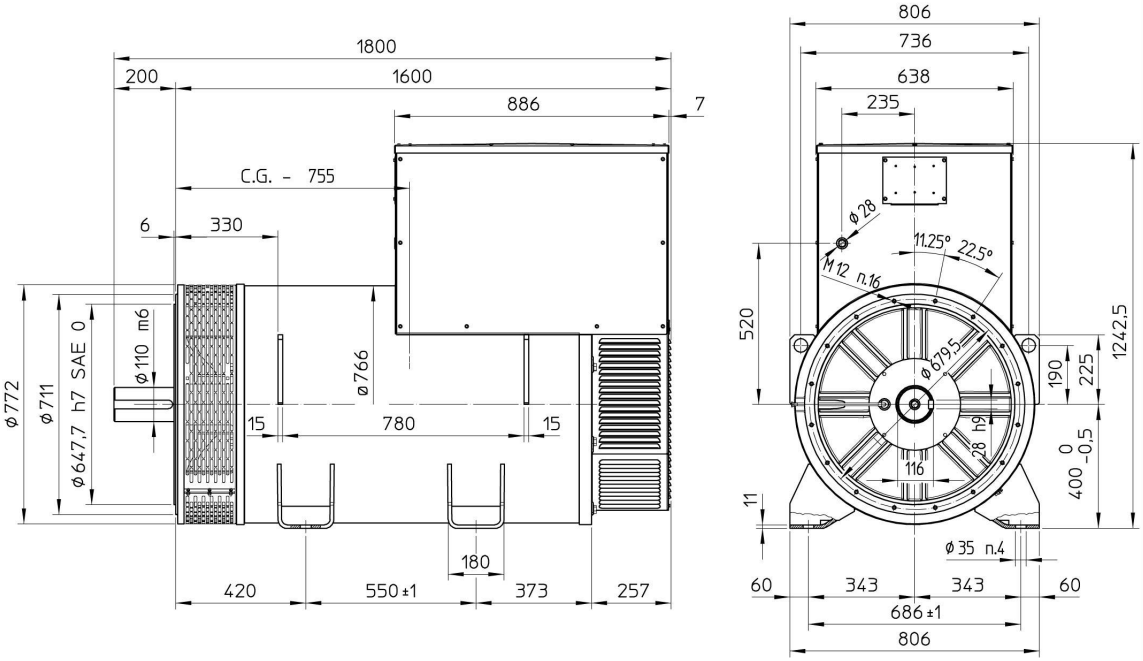

C.G.= GRAVITY CENTER

ECO43 VL4 A

SINGLE BEARING MOMENTS OF INERTIA

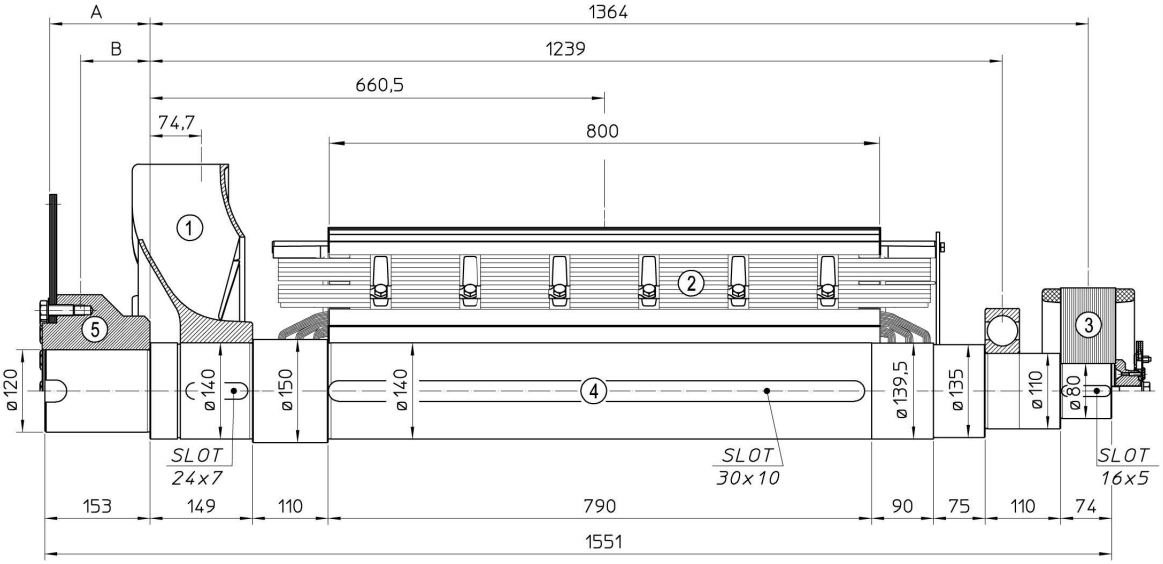

POS.	COMPONENT	WEIGHT (kg)	J (kgm^2)
1	FAN	26.2	1.0289
2	MAIN ROTOR	841.2	24.0977
3	EX. ROTOR	40.1	0.4889
4	SHAFT	168.9	0.3937
TOTAL		1076.4	26.0092

POS.	COMPONENT	SAE N°	A	B	WEIGHT (kg)	J (kgm^2)
5	SHAFTS COUPLING FLEX PLATE	14	155.7	99.5	56.5	0.8261
		18	145.7	100.7	60.9	1.2458
		21	130	98.5	69.0	2.2332

SINGLE BEARING DIMENSIONS

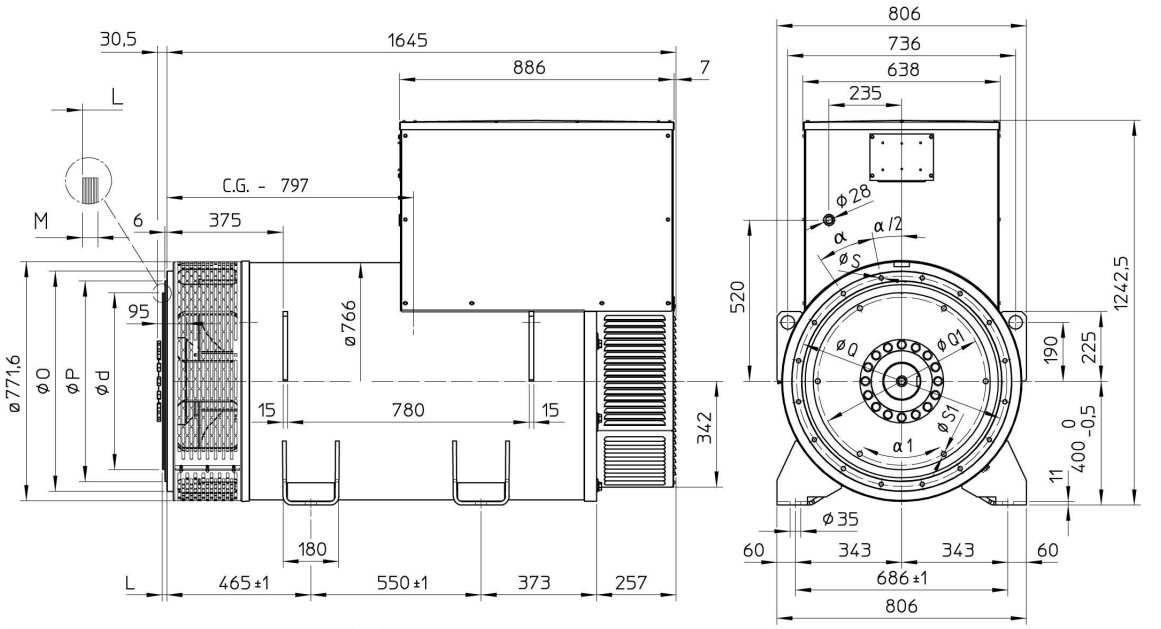

SAE N.	FLANGIA/FLANGE BRIDE/FLANSCH				
	O	P	Q	S	α
1	711	511.2	530.2	12	30°
0	711	647.7	679.5	14	22.5°
00	883	787.4	850.9	14	22.5°

SAE N.	GIUNTI A DISCHI / DISC COUPLING DISCQUE DE MONOPALIER / SCHEIBENKUPPLUNG					
	d	L	M	Q1	S1	α1
14	466.72	25.4	10	438.15	13.5	45°
18	571.5	15.7	10	542.92	16.5	60°
21	673.1	0	12	641.35	16.5	30°

C.G.= GRAVITY CENTER

Notes

Mecc Alte SpA (HQ)
Via Roma
20 – 36051 Creazzo
Vicenza – ITALY
T: +39 0444 396111
F: +39 0444 396166
E: info@meccalte.it
aftersales@meccalte.it

Mecc Alte Portable
Via Roma
20 – 36051 Creazzo
Vicenza – ITALY
T: +39 0444 396111
F: +39 0444 396166
E: info@meccalte.it
aftersales@meccalte.it

Mecc Alte Power Products srl
Via Melaro
2 – 36075 Montecchio
Maggiore (VI) – ITALY
T: +39 0444 1831295
F: +39 0444 1831306
E: info@meccalte.it
aftersales@meccalte.it

Zanardi Alternatori srl
Via Dei Laghi
48/B – 36077 Altavilla
Vicenza – ITALY
T: +39 0444 370799
F: +39 0444 370330
E: info@zanardialternatori.it

United Kingdom
Mecc Alte U.K. LTD
6 Lands' End Way
Oakham
Rutland LE15 6RF
T: +44 (0) 1572 771160
F: +44 (0) 1572 771161
E: info@meccalte.co.uk
aftersales@meccalte.co.uk

Spain
Mecc Alte España S.A.
C/ Rio Taibilla, 2
Polig. Ind. Los Valeros
03178 Benijofar (Alicante)
T: +34 (0) 96 6702152
F: +34 (0) 96 6700103
E: info@meccalte.es
aftersales@meccalte.es

China
Mecc Alte Alternator Haimen LTD
755 Nanhai East Rd
Jiangsu HEDZ 226100 PRC
T: +86 (0) 513 82325758
F: +86 (0) 513 82325768
E: info@meccalte.cn
aftersales@meccalte.cn

India
Mecc Alte India PVT LTD
Plot NO: 1, Sanaswadi
Talegaon
Dhamdhere Road Taluka:
Shirur, District:
Pune - 412208
Maharashtra, India
T: +91 2137 619600
F: +91 2137 619699
E: info@meccalte.in
aftersales@meccalte.in

U.S.A. and Canada
Mecc Alte Inc.
1229 Adams Drive
McHenry, IL, 60051
T: +1 815 344 0530
F: +1 815 344 0535
E: info@meccalte.us
aftersales@meccalte.us

Germany
Mecc Alte Generatoren GmbH
Ensener Weg 21
D-51149 Köln
T: +49 (0) 2203 503810
F: +49 (0) 2203 503796
E: info@meccalte.de
aftersales@meccalte.de

Australia
Mecc Alte Alternators PTY LTD
10 Duncan Road, PO Box 1046
Dry Creek, 5094, South
Australia
T: +61 (0) 8 8349 8422
F: +61 (0) 8 8349 8455
E: info@meccalte.com.au
aftersales@meccalte.com.au

France
Mecc Alte International S.A.
Z.E.La Gagnerie
16330 ST.Amant de Boixe
T: +33 (0) 545 397562
F: +33 (0) 545 398820
E: info@meccalte.fr
aftersales@meccalte.fr

Far East
Mecc Alte (F.E.) PTE LTD
19 Kian Teck Drive
Singapore 628836
T: +65 62 657122
F: +65 62 653991
E: info@meccalte.com.sg
aftersales@meccalte.com.sg

mecc alte

www.meccalte.com